Parts Manual for

SNAPPER®

CLASSIC SERIES WALK-BEHIND LEAF BLOWER SERIES 1 & 2

MODEL
LBC6151BV LBC6152BV SLBC55151BV

SNAPPER McDonough, GA, 30253 U.S.A.

COPYRIGHT © 2005
SNAPPER PRODUCTS, INC.
ALL RIGHTS RESERVED.

Revision IR, 10/10/2005

Manual No. 7006182
TP 400-5082-IR-BL-N

PAGE	GROUP
4	SLBC BLOWER ASSY (Series 1)
8	BLOWER ASSEMBLY (Series 1)
12	BLOWER ASSEMBLY (Series 2)

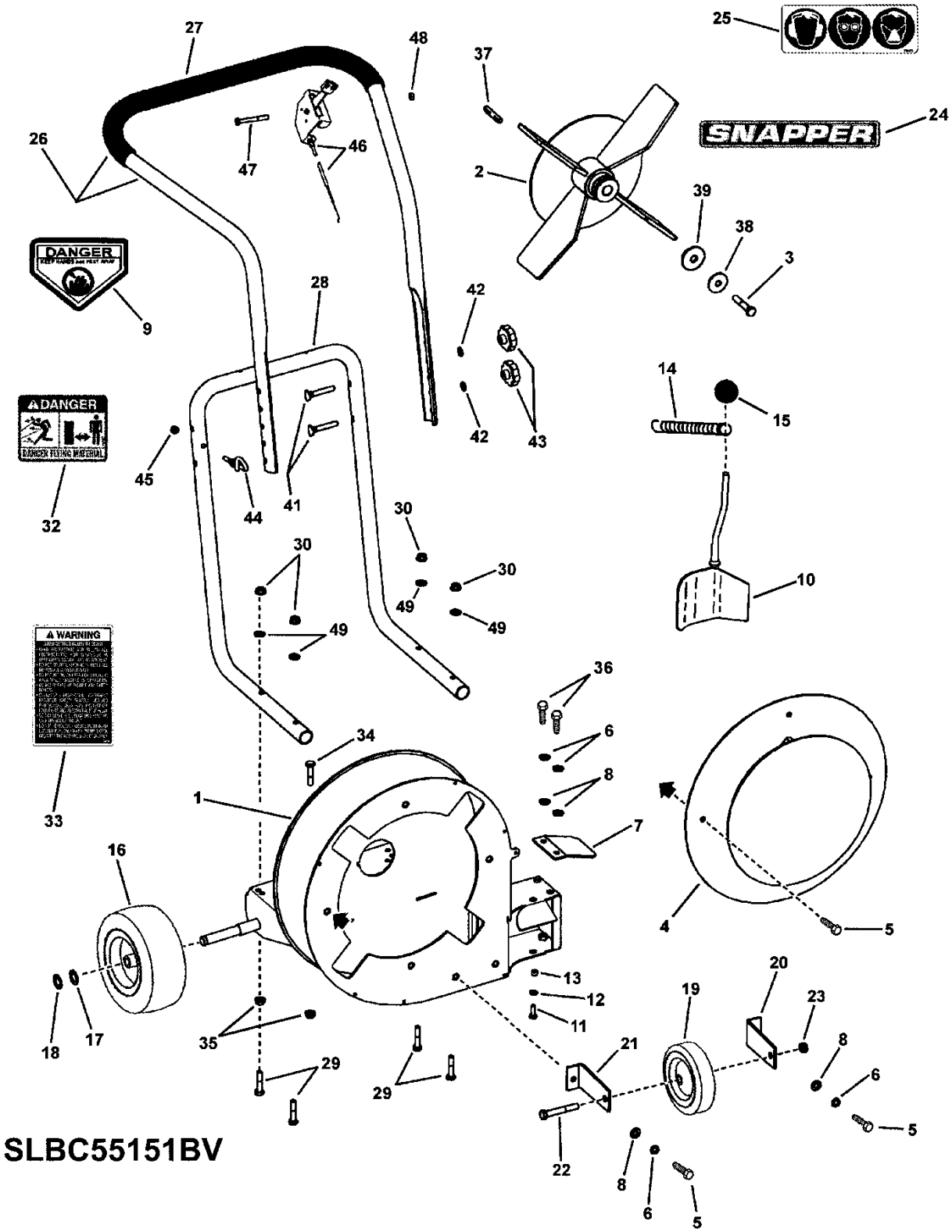
SNAPPER
DANGER
DANGER
WARNING
SLBC55151BV

SLBC BLOWER ASSY (Series 1)

Item	Part No	Qty	Description	Note
1	3010003	1	WELDMENT, Base & Housing, 52 Classic	
2	7043287	1	WELDMENT, Steel Impeller, 4 Blade, 15.00 O.D.	*replaces 3021506*
3	7090167	1	SCREW, 3/8-24 x 2” Hex Head Cap, GR 5	
4	3020234	1	WELDMENT, Intake Baffle	
5	7091318	8	SCREW, 5/16-18 x 3/4” Hex Head Cap, GR 5	
6	7091315	12	WASHER, 5/16” Split	
7	3024507	1	DEFLECTOR, Side Air	
8	7090188	8	WASHER, .34 x .69 x .08 Flat	
9	7013010	1	DECAL, Danger, Cut Finger (CPSC)	
10	3024508	1	WELDMENT, Door Front/Side Discharge	*includes a free-spinning bronze bushine (3031220)*
11	7091495	1	SCREW, 1/4-20 x 3/4” Hex Head Cap, GR 5	
12	7027223	1	WASHER, .263 x .375 x .062 Split Lock	
13	3031014	1	BUSHING, Steel .250 I.D. x .375 O.D. x .25 long	
14	3071782	1	SPRING, Extension	
15	3031103	1	KNOB, #230 Dimco (3/8-16 thread)	
16	3033001	2	*ASSY, Wheel & Tire, Sawtooth	*4.10/3.50-4 Kenda*
--	3033107	--	BALL BEARING, 5/8 x 1-3/8”	*included with item 16*
17	7091628	2	WASHER, .64 x .99 x .05 Flat	
18	7012763	2	RING, External Retaining	*Truarc 1500-62*
19	3033017	1	WHEEL, 6.00 x 1.50 Semi-Pneumatic	
20	3033101	1	BRACKET, Caster- RH	
21	3033102	1	BRACKET, Caster- LH	
22	7091501	1	SCREW, 3/8-16 x 2-1/2” Hex Head Cap, GR 5	
23	7091585	1	NUT, 3/8-16 Hex Center Lock, GR 5 or B	
24	7075760	1	DECAL, SNAPPER	
25	7075893	1	DECAL, Personal Protection	
26	3023270	1	ASSEMBLY, Upper Handle & Grip- Narrow	*(part # 7033876 + grip)*
27	7074422	1	GRIP, 1.0 x 21-1/2” Foam	
28	7033877	1	HANDLE, Lower Folding, Narrow, Blower	
29	7091908	4	SCREW, 5/16-18 x 1-3/4” Hex Heasd Cap, GR 5	
30	7091298	4	NUT, 5/16-18 Hex Nyloc	
31	3039112	1	*ENGINE, 6HP B&S Intek (not shown)	*Mod. 121212-0110-E1*
32	7033874	1	DECAL, Danger, Flying Material	
33	7033686	1	DECAL, Leaf Blower Warning	
34	7091540	4	SCREW, 5/16-18 x 1-1/2” Hex Head Cap, GR 5	

Footnotes:

*Includes tire, rim, air valve, grease fitting & 2 ball bearings.

*See your local Briggs distributor for engine service parts.

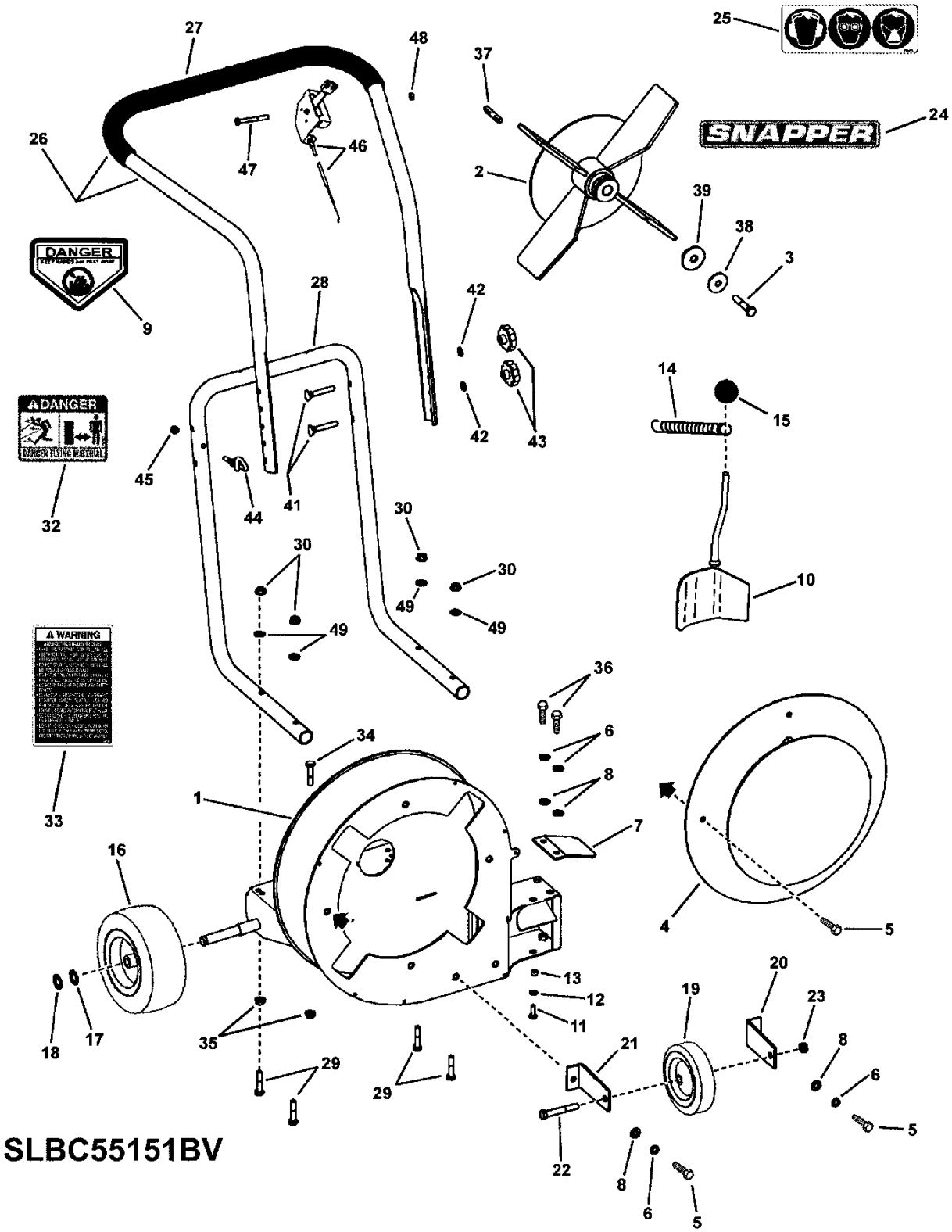
SNAPPER
DANGER
DANGER
WARNING
SLBC55151BV

SLBC BLOWER ASSY (Series 1)

Item	Part No	Qty	Description	Note
35	7091601	4	NUT, 5/16-18 Hex Flange Lock, GR 5	
36	7090517	1	WASHER, 3/8” Flat	*not shown*
37	7010210	1	KEY, 1/4” Square x 2”	
38	7012063	1	WASHER, .411/.406 I.D. Cone	
39	7091962	1	WASHER, .468 x 1.625 x .25 Flat	
40	3079214	1	DECAL, 5.5 HP B&S (not shown)	*B&S p/n 274582*
41	7091189	4	BOLT, 5/16-18 x 2” Curved Head Square Neck	
42	7090391	4	WASHER, 5/16” Internal Tooth Lock	
43	3071776	4	KNOB, Fluted (5/16-18 thread)	
44	7046465	1	ROPE GUIDE (1/4-20 thread)	
45	7090372	1	NUT, 1/4-20 Hex Center Lock, GR 5 or B	
46	3071800	1	THROTTLE CONTROL, B&S, 35.00/1.62	*part # is stamped on part*
47	7090505	1	SCREW, 1/4-20 x 2” Hex Head Cap, GR 5	
48	7076978	1	NUT, 1/4-20 Hex Nyloc	
49	1717312	4	WASHER, 5/16” Curved	

Footnotes:

*Includes tire, rim, air valve, grease fitting & 2 ball bearings.

*See your local Briggs distributor for engine service parts.

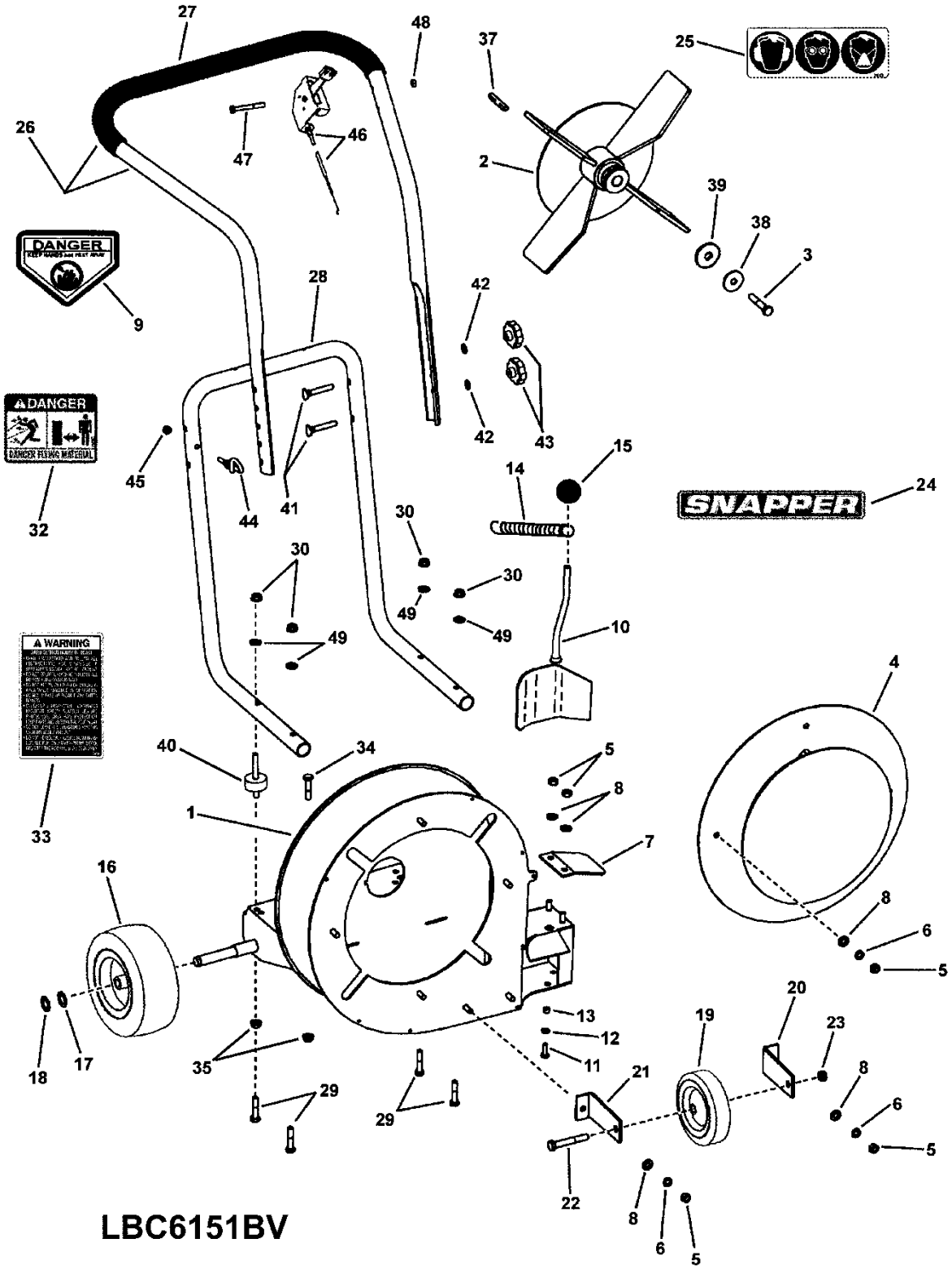
27
48
37
25
26
47
46
2
39
38
3
DANGER
9
28
42
42
43
DANGER
DANGER FLYING MATERIAL
45
44
41
15
14
24
SNAPPER
32
30
30
30
49
49
49
10
WARNING
33
4
40
34
5
8
1
7
16
8
6
5
20
13
19
23
12
11
18
17
35
21
8
29
29
6
5
22
8
6
5
LBC6151BV

BLOWER ASSEMBLY (Series 1)

Item	Part No	Qty	Description	Note
1	3010003	1	WELDMENT, Base & Housing, 52 Classic	
2	7043287	1	WELDMENT, Steel Impeller, 4 Blade, 15.00 O.D.	*replaces 3021506*
3	7090167	1	SCREW, 3/8-24 x 2” Hex Head Cap, GR 5	
4	3020234	1	WELDMENT, Intake Baffle	
5	7091511	8	NUT, 5/16-18 Hex, GR 5 or B	
6	7091315	8	WASHER, 5/16” Split	
7	3024507	1	DEFLECTOR, Side Air	
8	7090188	6	WASHER, .34 x .69 x .08 Flat	
9	7013010	1	DECAL, Danger, Cut Finger (CPSC)	
10	3024508	1	WELDMENT, Door Front/Side Discharge	*includes a free-spinning bronze bushine (3031220)*
11	7091495	1	SCREW, 1/4-20 x 3/4” Hex Head Cap, GR 5	
12	7027223	1	WASHER, .263 x .375 x .062 Split Lock	
13	3031014	1	BUSHING, Steel Sleeve .250 I.D. x .375 O.D. x .25 long	
14	3071782	1	SPRING, Extension	*was 3024502*
15	3031103	1	KNOB, #230 Dimco (3/8-16 thread)	*or 7012659*
16	3033001	2	*ASSY, Wheel & Tire, Sawtooth 4.10/3.50-4 Kenda	
--	3033107	--	BALL BEARING, 5/8 x 1-3/8”	*included with item 16*
17	7091628	2	WASHER, .64 x .99 x .05 Flat	
18	7012763	2	RING, External Retaining	*Truarc 1500-62*
19	3033017	1	WHEEL, 6.00 x 1.50 Semi-Pneumatic	
20	3033101	1	BRACKET, Caster- RH	
21	3033102	1	BRACKET, Caster- LH	
22	7091501	1	SCREW, 3/8-16 x 2-1/2” Hex Head Cap, GR 5	
23	7091585	1	NUT, 3/8-16 Hex Center Lock, GR 5 or B	
--	3033003	1	ASSEMBLY, Front Caster (incl. items 19 thru 23)	
24	7075760	1	DECAL, SNAPPER	
25	7075893	1	DECAL, Personal Protection	
26	3023270	1	ASSEMBLY, Upper Handle & Grip- Narrow	*(part # 7033876 + grip)*
27	7074422	1	GRIP, 1.0 x 21-1/2” Foam	
28	7033877	1	HANDLE, Lower Folding, Narrow, Blower	
29	7091908	4	SCREW, 5/16-18 x 1-3/4” Hex Heasd Cap, GR 5	*not used on units with vibration mounts*
30	7091298	4	NUT, 5/16-18 Hex Nyloc	
31	3039112	1	*ENGINE, 6HP B&S Intek, 1” Horozontal Shaft (not shown)	*Mod. 121212-0110-E1*
32	7033874	1	DECAL, Danger, Flying Material	
33	7033686	1	DECAL, Leaf Blower Warning	

Footnotes:

*Includes tire, rim, air valve, grease fitting & 2 ball bearings.

*See your local Briggs distributor for engine service parts.

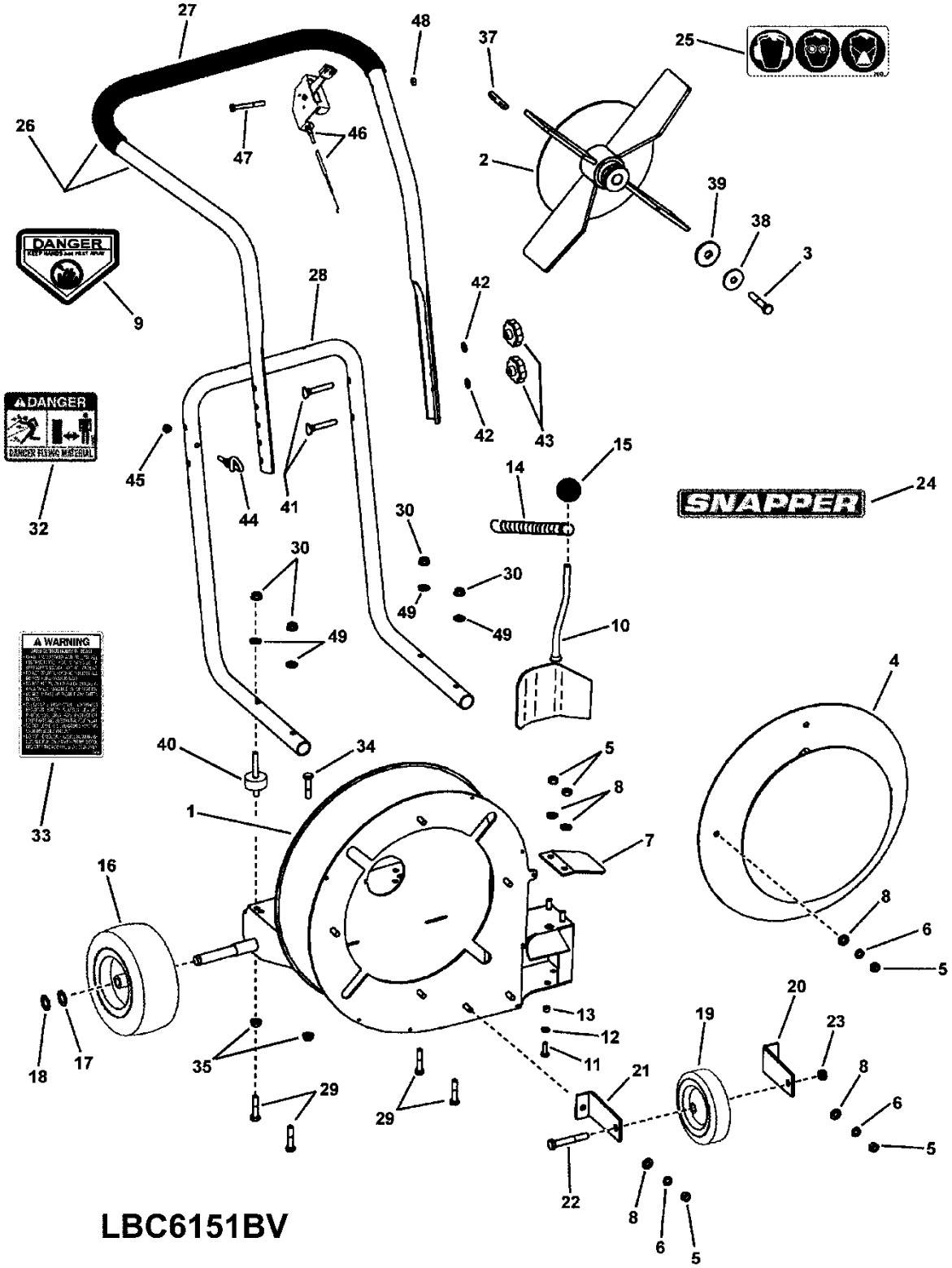
27
48
37
25
26
47
46
2
39
38
3
DANGER
9
28
42
42
43
DANGER
DANGER FLYING MATERIAL
45
44
41
15
14
24
SNAPPER
32
30
30
30
49
49
49
10
WARNING
4
40
34
5
8
1
7
33
16
8
6
5
20
13
19
23
12
11
18
17
35
21
8
29
29
6
5
22
8
6
5
LBC6151BV

BLOWER ASSEMBLY (Series 1)

Item	Part No	Qty	Description	Note
34	7091540	4	SCREW, 5/16-18 x 1-1/2” Hex Head Cap, GR 5	
35	7091601	8	NUT, 5/16-18 Hex Flange Lock, GR 5	
36	7090517	1	WASHER, 3/8” Flat	*not shown*
37	7010210	1	KEY, 1/4” Square x 2”	
38	7012063	1	WASHER, .411/.406 I.D. Cone	
39	7091962	1	WASHER, .468 x 1.625 x .25 Flat	
40	3032160	4	MOUNT, Vibration (5/16-18 threads, both ends)	
41	7091189	4	BOLT, 5/16-18 x 2” Curved Head Square Neck, GR 2	
42	7090391	4	WASHER, 5/16” Internal Tooth Lock	
43	3071776	4	KNOB, Folding Handle	
44	7046465	1	ROPE GUIDE (1/4-20 thread)	
45	7090372	1	NUT, 1/4-20 Hex Center Lock, GR 5 or B	
46	3071800	1	THROTTLE CONTROL, B&S, 35.00/1.62	*part # is stamped on part*
47	7090505	1	SCREW, 1/4-20 x 2” Hex Head Cap, GR 5	
48	7076978	1	NUT, 1/4-20 Hex Nyloc	
49	1717312	4	WASHER, 5/16” Curved	

Footnotes:

*Includes tire, rim, air valve, grease fitting & 2 ball bearings.

*See your local Briggs distributor for engine service parts.

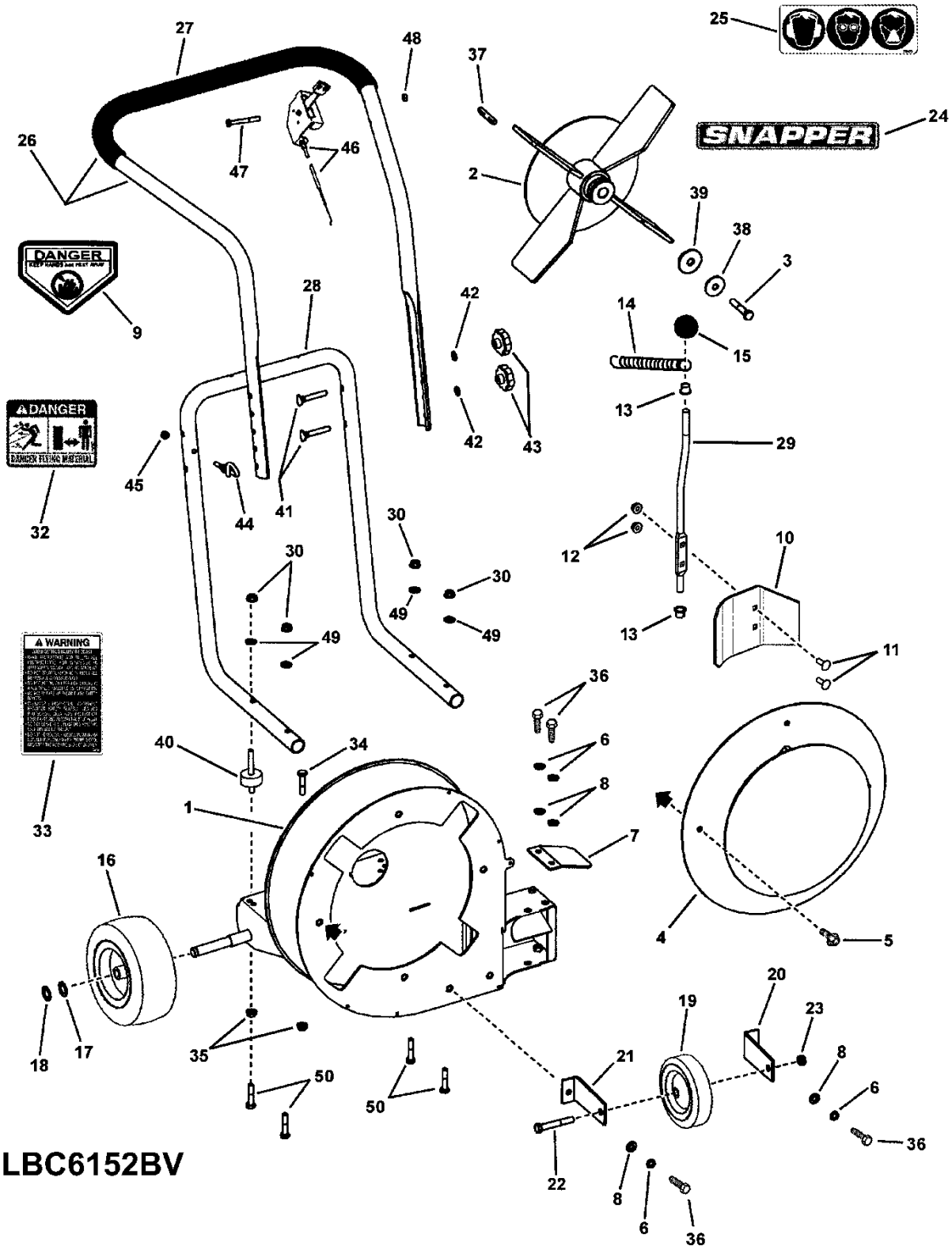
SNAPPER
DANGER
DANGER
WARNING
LBC6152BV

BLOWER ASSEMBLY (Series 2)

Item	Part No	Qty	Description	Note
1	7043239	1	WELDMENT, Base & Housing, 52 Classic	
2	7043287	1	WELDMENT, Steel Impeller, 4 Blade, 15.00 O.D.	
3	7090167	1	SCREW, 3/8-24 x 2” Hex Head Cap, GR 5	
4	3020234	1	WELDMENT, Intake Baffle	
5	7091525	4	BOLT, 5/16-18 x 1/2” Hex Flange Lock	
6	7091315	4	WASHER, 5/16” Split	
7	3024507	1	DEFLECTOR, Side Air	
8	7090188	4	WASHER, .34 x .69 x .08 Flat	
9	7013010	1	DECAL, Danger, Cut Finger (CPSC)	
10	7078161	1	DOOR, Forward Air Control	
11	7091530	2	BOLT, 1/4-20 x 3/4” Short Square Neck, GR 5	
12	7091584	2	NUT, 1/4-20 Hex Flange Lock, GR 5	
13	7078169	2	BEARING, 3/8 Clip	
14	3071782	1	SPRING, Extension	
15	3031103	1	KNOB, #230 Dimco (3/8-16 thread)	
16	3033001	2	*ASSY, Wheel & Tire, Sawtooth 4.10/3.50-4 Kenda	
--	3033107	--	BALL BEARING, 5/8 x 1-3/8”	*included with item 16*
17	7091628	2	WASHER, .64 x .99 x .05 Flat	
18	7012763	2	RING, External Retaining	*Truarc 1500-62*
19	3033017	1	WHEEL, 6.00 x 1.50 Semi-Pneumatic	
20	3033101	1	BRACKET, Caster- RH	
21	3033102	1	BRACKET, Caster- LH	
22	7091501	1	SCREW, 3/8-16 x 2-1/2” Hex Head Cap, GR 5	
23	7091585	1	NUT, 3/8-16 Hex Center Lock, GR 5 or B	
--	3033003	1	ASSEMBLY, Front Caster (incl. items 19 thru 23)	
24	7075760	1	DECAL, SNAPPER	
25	7075893	1	DECAL, Personal Protection	
26	3023270	1	ASSEMBLY, Upper Handle & Grip- Narrow	*(part # 7033876 + grip)*
27	7074422	1	GRIP, 1.0 x 21-1/2” Foam	
28	7033877	1	HANDLE, Lower Folding, Narrow, Blower	
29	7078163	1	ROD, Door Front/Side Discharge	
30	7091298	4	NUT, 5/16-18 Hex Nyloc	
31	3039112	1	*ENGINE, 6HP B&S Intek, 1” Horozontal Shaft	*(not shown) Mod. 121212-0110-E1*
32	7033874	1	DECAL, Danger, Flying Material	
33	7033686	1	DECAL, Leaf Blower Warning	

Footnotes:

*Includes tire, rim, air valve, grease fitting & 2 ball bearings.

*See your local Briggs distributor for engine service parts.

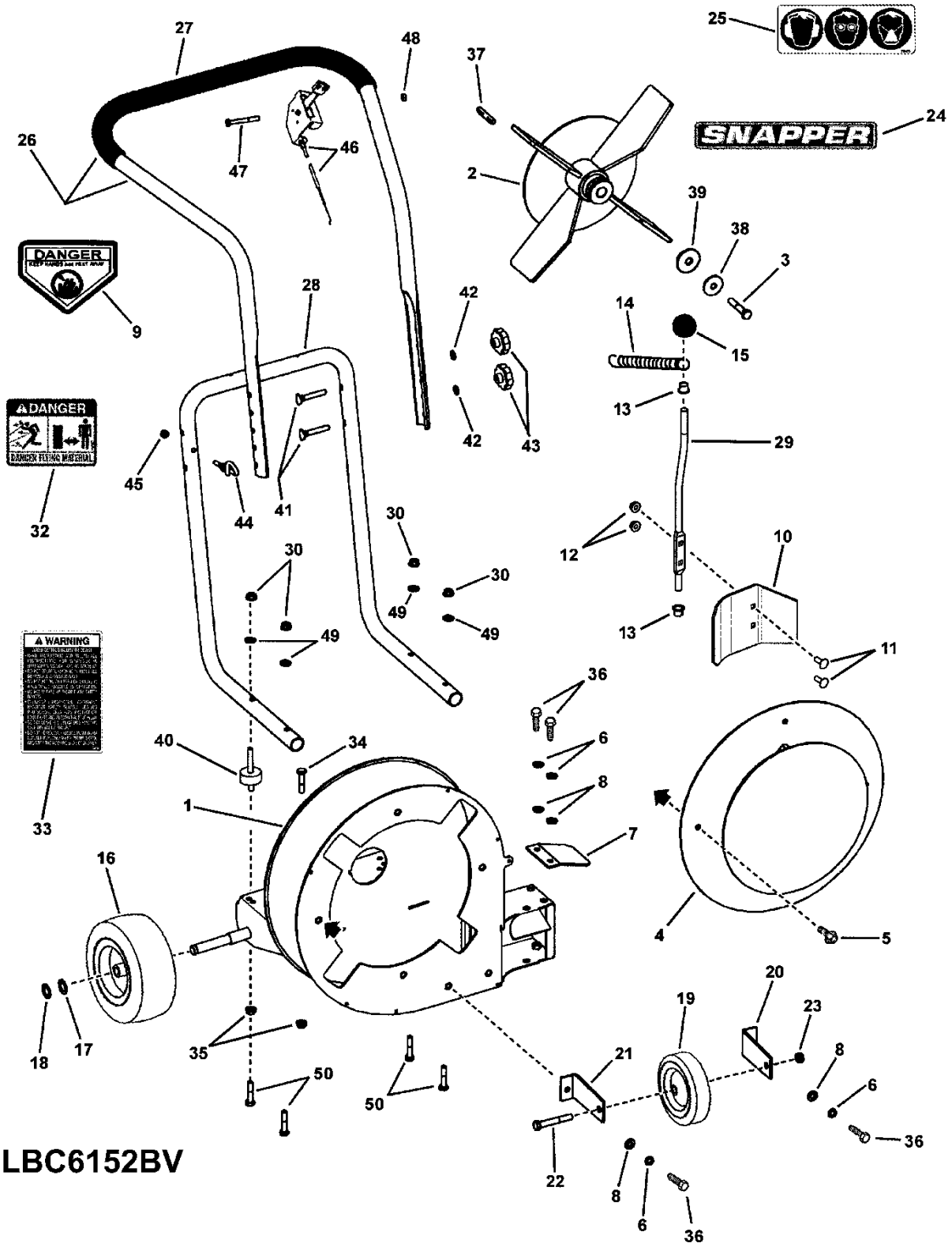
SNAPPER
DANGER
DANGER
WARNING
LBC6152BV

BLOWER ASSEMBLY (Series 2)

Item	Part No	Qty	Description	Note
34	7091540	4	SCREW, 5/16-18 x 1-1/2” Hex Head Cap, GR 5	
35	7091601	8	NUT, 5/16-18 Hex Flange Lock, GR 5	
36	7091318	4	SCREW, 5/16-18 x 3/4” Hex Head Cap, GR 5	
37	7010210	1	KEY, 1/4” Square x 2”	
38	7012063	1	WASHER, .411/.406 I.D. Cone	
39	7091962	1	WASHER, .468 x 1.625 x .25 Flat	
40	3032160	4	MOUNT, Vibration (5/16-18 threads, both ends)	
41	7091189	4	BOLT, 5/16-18 x 2” Curved Head Square Neck, GR 2	
42	7090391	4	WASHER, 5/16” Internal Tooth Lock	
43	3071776	4	KNOB, Folding Handle	
44	7046465	1	ROPE GUIDE (1/4-20 thread)	
45	7090372	1	NUT, 1/4-20 Hex Center Lock, GR 5 or B	
46	3071800	1	THROTTLE CONTROL, B&S, 35.00/1.62	*part # is stamped on part*
47	7090505	1	SCREW, 1/4-20 x 2” Hex Head Cap, GR 5	
48	7076978	1	NUT, 1/4-20 Hex Nyloc	
49	1717312	4	WASHER, 5/16” Curved	
50	7091908	4	SCREW, 5/16-18 x 1-3/4” Hex Head Cap, GR 5	

Footnotes:

*Includes tire, rim, air valve, grease fitting & 2 ball bearings.

*See your local Briggs distributor for engine service parts.

Parts Manual for

SNAPPER®

CLASSIC SERIES WALK-BEHIND LEAF BLOWER SERIES 1 & 2

IT IS THE POLICY OF SNAPPER TO IMPROVE ITS PRODUCTS WHENEVER IT IS POSSIBLE AND PRACTICAL TO DO SO. WE RESERVE THE RIGHT TO MAKE CHANGES OR ADD IMPROVEMENTS AT ANY TIME WITHOUT INCURRING ANY OBLIGATION TO MAKE SUCH CHANGES ON PRODUCTS MANUFACTURED PREVIOUSLY.

SNAPPER. McDonough, GA, 30253 U.S.A.

COPYRIGHT © 2005
SNAPPER PRODUCTS, INC.
ALL RIGHTS RESERVED.

Revision IR, 10/10/2005

Manual No. 7006182
TP 400-5082-IR-BL-N