Parts Manual

Walkbehind Mower

Models

Mfg. No.	Description
7800865	EMP22675HW, 22" 6.75GT Murray High Wheel Self-Propelled Walk Behind Mower (2011)

Manual Part No. 1754604
Revision -
Rev. Date: 2/8/2012

Not for
Reproduction

PRODUCT COMPONENTS **PAGES**

Handles & Controls Group 4
Engine & Blade Group 6
Transmission Group, Single-Speed, Front Wheel Drive 8
Decals Group, 22" WBM, Murray, Euro 10
Deck Group, Murray, 22" HW 12
Torque Specification Chart ..... Inside Back Cover

Not for Reproduction

Handles & Controls Group

NOTE: Unless noted otherwise, use the standard hardware torque specification chart.

7502765

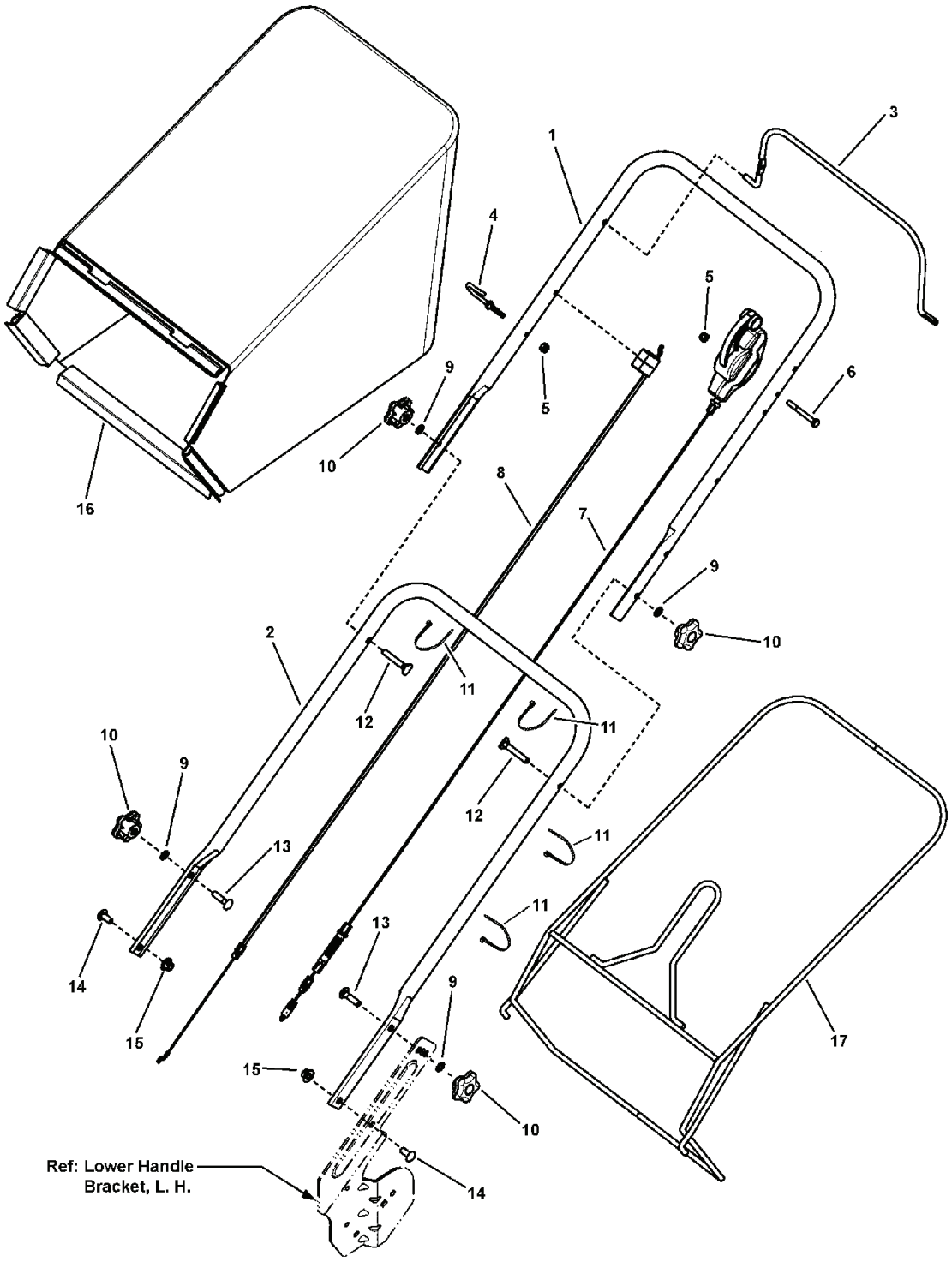

The above parts group applies to the following Mfg. Nos.:
7800865 - EMP22675HW

© Copyright 2012 by Briggs & Stratton Corporation
Milwaukee, WI, USA. All rights reserved

Handles & Controls Group

REF NO	PART NO.	QTY.	DESCRIPTION
1	7300705AMA	1	UPPER HANDLE, Propelled
2	7301013AYP	1	HANDLE, Lower
3	7103975AYP	1	BAIL, OPC Propelled
4	071530MA	1	Guide, Rope
5	7076978SM	2	NUT, 1/4-20 Nyloc
6	7090892YP	1	CAPSCREW, Hex Head, 1/4-20 x 2-1/4”, GR 5
7	1101670MA	1	CONTROL, Drive, Single Speed
8	7103977YP	1	CABLE, Bail, Self-Propelled, Hi-Wheel
9	7090391SM	4	WASHER, Internal Tooth Lock, 5/16”
10	7105085YP	4	KNOB, Handle
11	7024649YP	4	WIRE TIE, 11 Inch Std Black Nylon
12	7091189YP	2	BOLT, Curved Head Square Neck, 5/16-18 x 2”, GR 2
13	7091714YP	2	BOLT, Carriage, 5/16-18 x 1"
14	7091508SM	2	BOLT, Carriage, 5/16-18 x 3/4”
15	7090951SM	2	NUT, Hex, 5/16-18
16	7102573YP	1	GRASS BAG, Cloth, Murray
17	7101230AYP	1	WELDMENT, Frame, Grass Bag

Not for Reproduction

Footnotes

The above parts group applies to the following Mfg. Nos.:
7800865 - EMP22675HW

© Copyright 2012 by Briggs & Stratton Corporation
Milwaukee, WI, USA. All rights reserved

Engine & Blade Group

NOTE: Unless noted otherwise, use the standard hardware torque specification chart.

7502750

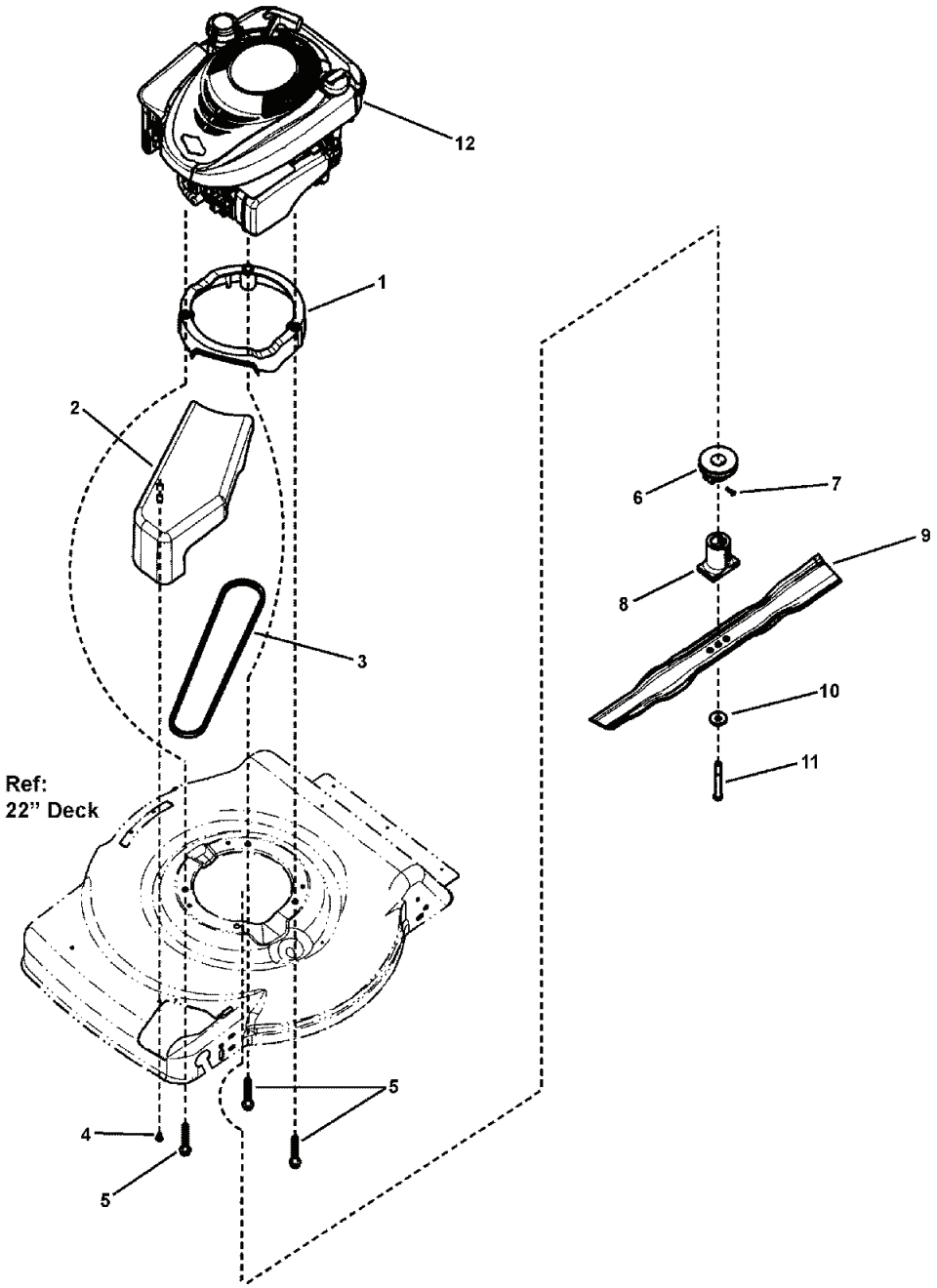

The above parts group applies to the following Mfg. Nos.:
7800865 - EMP22675HW

© Copyright 2012 by Briggs & Stratton Corporation
Milwaukee, WI, USA. All rights reserved

Engine & Blade Group

REF NO	PART NO.	QTY.	DESCRIPTION
1	7101449YP	1	ASSEMBLY, Engine Spacer, 22 WBM, Propelled
2	1101596MA	1	COVER, Belt, Plastic
3	7101193MA	1	BELT, Drive 22 WBM, SS (3L sect. 33.75 effective length)
4	7900018YP	1	SCREW, Round Washer Hex Head Torx, Hi-Lo
5	025X11MA	3	BOLT, 3/8-16 x 2-1/2 Hex Washer Face
6	7100763MA	1	PULLEY, Engine, 22 Deck, Single Speed
7	26X208MA	1	SCREW, #8-11 x 5/8 Poly
8	7100740YP	1	HUB, Blade, 22 Deck
9	7100851AYP	1	BLADE, 22 Walk Mower
10	1101989MA	1	WASHER, Bellville, .38 ID x 1.183 OD
11	01X144MA	1	BOLT, 3/8-24 x 3-1/4 Hex Head, GR 8
12	126T02-7268-H1	1	* ENGINE, 675 Series Quantum, Euro

Not for Reproduction

Footnotes

Note* To verify your specific engine model, please reference the ID Tag located on your engine. See your local Briggs & Stratton distributor for parts and service.

The above parts group applies to the following Mfg. Nos.:
7800865 - EMP22675HW

© Copyright 2012 by Briggs & Stratton Corporation
Milwaukee, WI, USA. All rights reserved

Transmission Group, Single-Speed, Front Wheel Drive

NOTE: Unless noted otherwise, use the standard hardware torque specification chart.

7501884

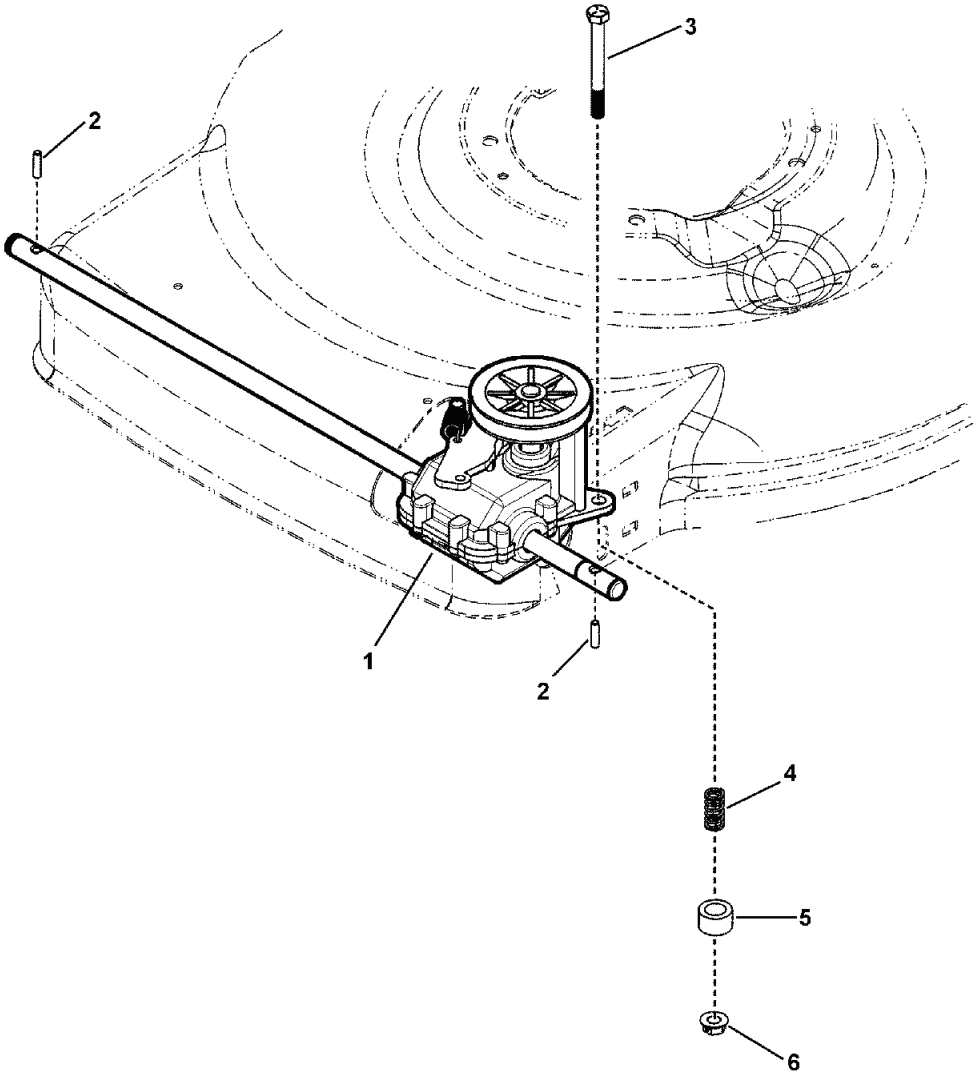

The above parts group applies to the following Mfg. Nos.:
7800865 - EMP22675HW

© Copyright 2012 by Briggs & Stratton Corporation
Milwaukee, WI, USA. All rights reserved

Transmission Group, Single-Speed, Front Wheel Drive

REF NO	PART NO.	QTY.	DESCRIPTION
1	7101206MA	1	TRANSMISSION, 22” WBM Single Speed, Front Wheel Drive
2	7101270YP	2	DRIVE PIN, 22" WBM, Front Wheel Drive
3	01X156MA	1	SCREW, 5/16-18 x 3” Hex Head Cap, P&O
4	164X27MA	1	SPRING, Compression
5	7102671YP	1	SPACER, Drive Transmission
6	015X88MA	1	NUT, 5/16-18 Hex Flange Center Lock, Grade F

Not for Reproduction

Footnotes

The above parts group applies to the following Mfg. Nos.:
7800865 - EMP22675HW

© Copyright 2012 by Briggs & Stratton Corporation
Milwaukee, WI, USA. All rights reserved

Decals Group, 22" WBM, Murray, Euro

NOTE: Unless noted otherwise, use the standard hardware torque specification chart.

7502753

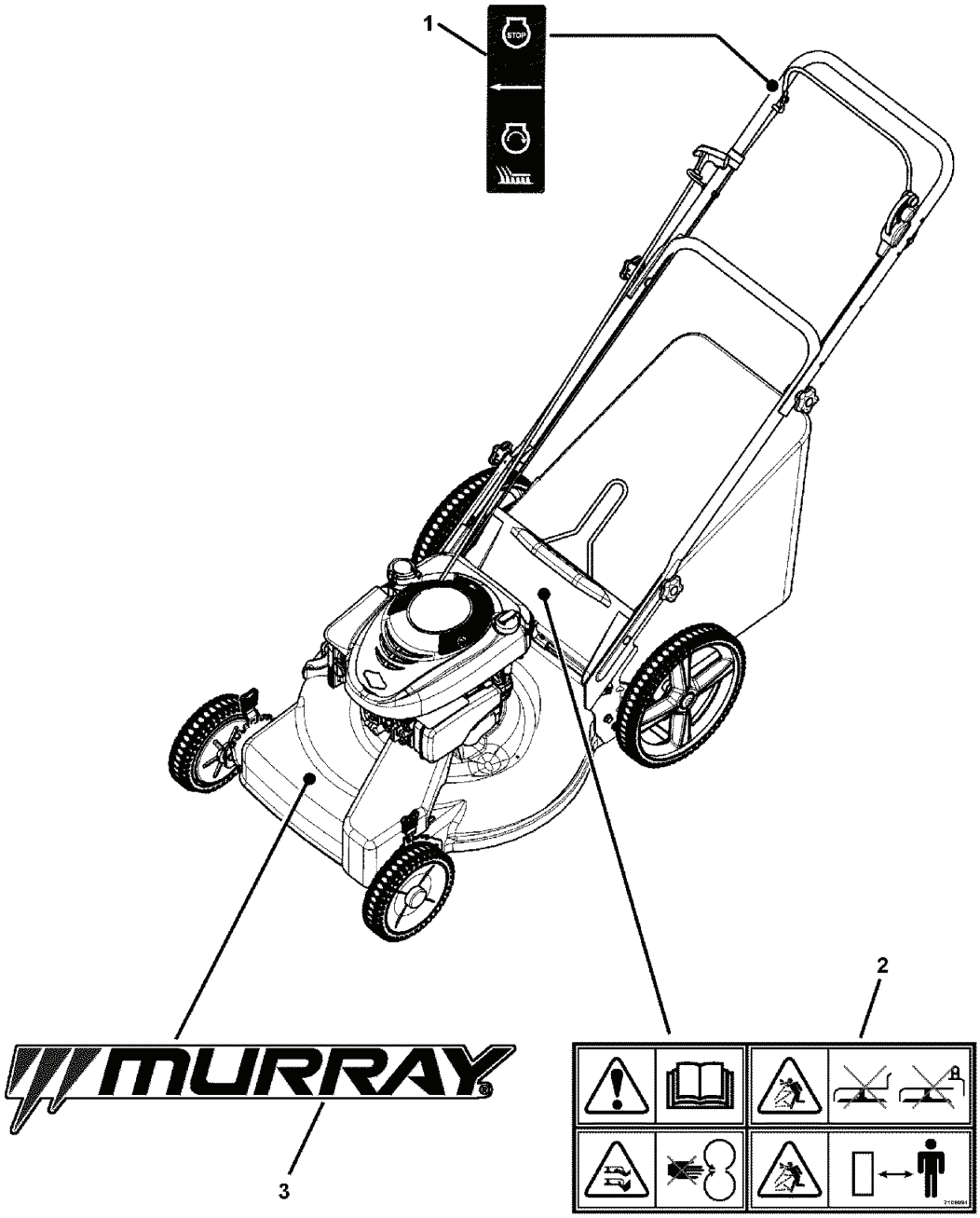

The above parts group applies to the following Mfg. Nos.:
7800865 - EMP22675HW

© Copyright 2012 by Briggs & Stratton Corporation
Milwaukee, WI, USA. All rights reserved

Decals Group, 22" WBM, Murray, Euro

REF NO	PART NO.	QTY.	DESCRIPTION
1	7029782MA	1	DECAL, OPC Bail International Symbol
2	7101084YP	1	DECAL, Warning, Euro, Multi-Panel
3	7102124YP	1	DECAL, Murray Logo, Deck, 20FC

Not for Reproduction

Footnotes

The above parts group applies to the following Mfg. Nos.:
7800865 - EMP22675HW

© Copyright 2012 by Briggs & Stratton Corporation
Milwaukee, WI, USA. All rights reserved

Deck Group, Murray, 22" HW

NOTE: Unless noted otherwise, use the standard hardware torque specification chart.

7502764

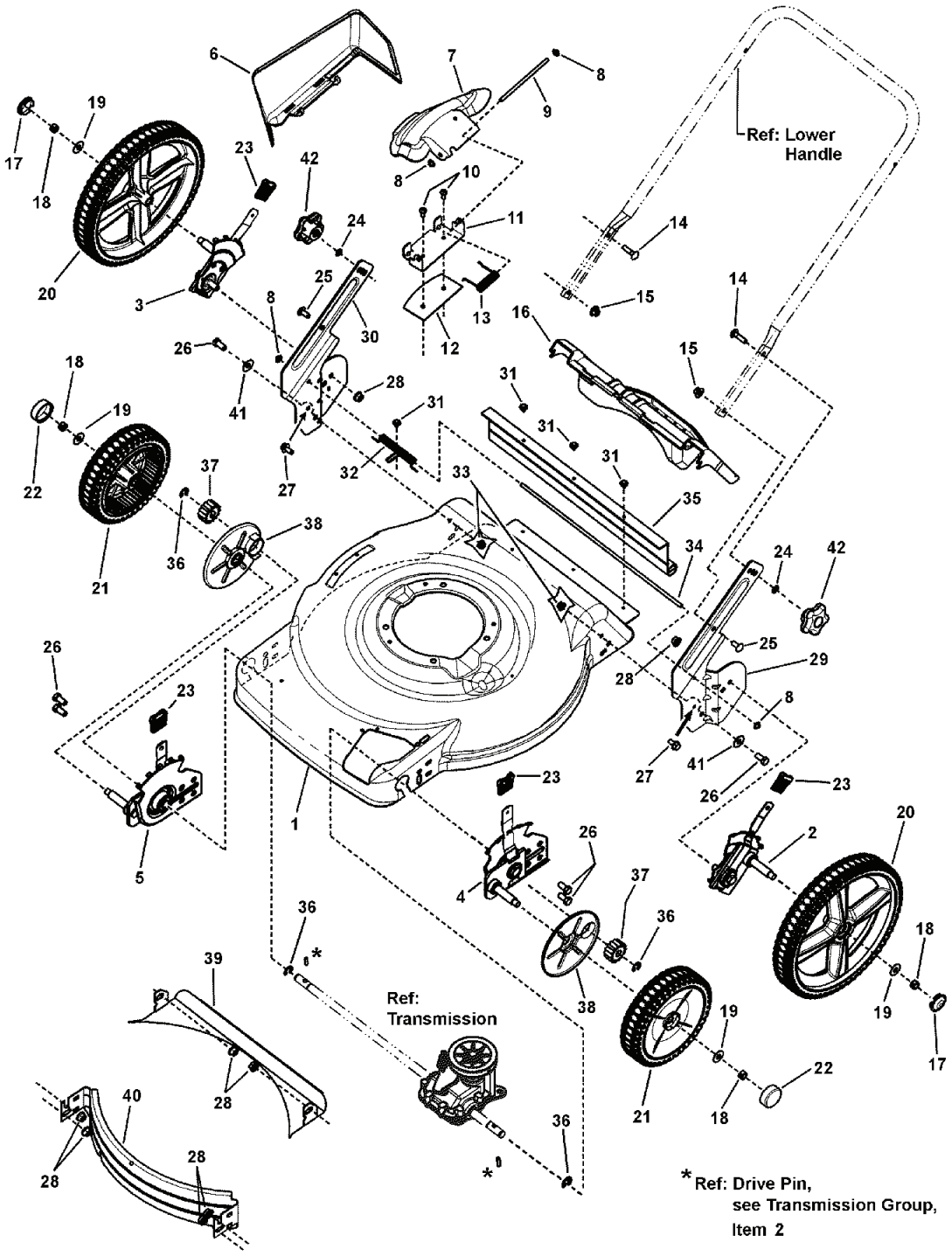

The above parts group applies to the following Mfg. Nos.:
7800865 - EMP22675HW

© Copyright 2012 by Briggs & Stratton Corporation
Milwaukee, WI, USA. All rights reserved

Deck Group, Murray, 22" HW

REF NO	PART NO.	QTY.	DESCRIPTION
1	7300400BIYP	1	DECK, 22" Walk, 3-N-1
2	7501055YP	1	ASSEMBLY, Height-Of-Cut, 22", 7 Position, Left Rear
3	7501056YP	1	ASSEMBLY, Height-Of-Cut, 22", 7 Position, Right Rear
4	7501058YP	1	ASSEMBLY, Height-Of-Cut, 22”, Propelled, 7 Position, Left Front
5	7501057YP	1	ASSEMBLY, Height-Of-Cut, 22", Propelled, 7 Position, Right Front
6	1101097MA	1	SIDE CHUTE, Plastic, Black
7	1101098MA	1	COVER, Mulch, Plastic, Black
8	7091020YP	4	PUSHNUT, 1/4”
9	215X19ZMA	1	ROD, Pivot, Chute
10	7900067YP	3	SCREW, Torx, 1/4-20 x 11/16”
11	7300855BIYP	1	BRACKET, Chute
12	7300856BIYP	1	PLATE, Mulch
13	166X38MA	1	SPRING, Torsion, Chute
14	7091714YP	2	BOLT, 5/16-18 x 1” Round Head Square Neck Carriage, GR 5
15	7090951SM	2	NUT, Hex, 5/16-18
16	7101243YP	1	DOOR, Rear Discharge
17	7101931MA	2	HUBCAP, 12” Wheel
18	7091585SM	4	NUT, 3/8-16 Hex Center Lock
19	17X169MA	4	WASHER, 1” O.D. x .387 I.D. Flat, 1
20	7501399YP	2	ASSY, Wheel, 12” x 2” Idle, NB, Murray Tread, Pewter
21	7501390YP	2	WHEEL, 8 x 2, Drive
22	7101351MA	2	HUBCAP
23	7100633YP	4	GRIP, Height Latch
24	7090391SM	2	WASHER, Internal Tooth Lock, 5/16”
25	7091508SM	2	BOLT, Carriage, 5/16-18 x 3/4”
26	7090134MA	6	SCREW, 3/8-16 x 3/4” Hex Head Cap
27	7090606SM	2	BOLT, Hex Flange, 5/16-18 x 5/8
28	7900053MA	8	NUT, 3/8-16 Hex Flange Lock
29	7300583AYP	1	BRACKET, Lower Handle, Left
30	7300582AYP	1	BRACKET, Lower Handle, Right
31	7091286YP	4	SCREW, Self Tap, SEMS, 10-24 x 1/2
32	7101461YP	1	SPRING, Torsion, Rear Door
33	7090585MA	2	NUT, Hex Flange Lock, 5/16-18
34	7101070YP	1	ROD, Pivot, Rear Door
35	7102422YP	1	GUARD, Rear 22" Hi-Wheel
36	7014341YP	4	RETAINING RING
37	7101207YP	2	GEAR, Pinion
38	7101402YP	2	SHIELD, Dust
39	7300854BIYP	1	BAFFLE, Rear
40	7300440BIYP	1	BAFFLE, Front, 22” WBM
41	7091528SM	2	WASHER, .375 I.D. x .875 x .083 Flat
42	7105085YP	2	KNOB, Handle

Not for Reproduction

Footnotes

The above parts group applies to the following Mfg. Nos.:
7800865 - EMP22675HW

© Copyright 2012 by Briggs & Stratton Corporation
Milwaukee, WI, USA. All rights reserved

Not for
Reproduction

Hardware Identification & Torque Specifications

Torque Specification Chart

FOR STANDARD METRIC MACHINE HARDWARE (Tolerance ± 20%)

Property Class	5.6 Class 5.6		8.8 Class 8.8		10.9 Class 10.9		12.9 Class 12.9	
Size Of Hardware	*in/lbs* **ft/lbs**	Nm.	*in/lbs* **ft/lbs**	Nm.	*in/lbs* **ft/lbs**	Nm.	*in/lbs* **ft/lbs**	Nm.
M3	*5.88*	*.56*	*13.44*	*1.28*	*19.2*	*1.80*	*22.92*	2.15
M4	*13.44*	*1.28*	*30.72*	*2.90*	*43.44*	*4.10*	*52.56*	4.95
M5	*26.4*	*2.50*	*60.96*	*5.75*	**5.97**	*8.10*	**7.15**	9.7
M6	*44.64*	*4.3*	**7.3**	*9.9*	**10.3**	*14*	**12.1**	16.5
M7	**5.2**	*7.1*	**12.1**	*16.5*	**16.9**	*23*	**19.9**	27
M8	**7.7**	*10.5*	**17.7**	*24*	**25**	*34*	**29**	40
M10	**15**	*21*	**35**	*48*	**50**	*67*	**59**	81
M12	**26**	*36*	**61**	*83*	**86.2**	*117*	**103**	140
M14	**42**	*58*	**101**	*132*	**136**	*185*	**162**	220
M16	**64**	*88*	**147**	*200*	**210**	*285*	**250**	340
M18	**89**	*121*	**202**	*275*	**287**	*390*	**346**	470
M20	**126**	*171*	**290**	*390*	**405**	*550*	**486**	660
M22	**169**	*230*	**390**	*530*	**559**	*745*	**656**	890
M24	**217**	*295*	**497**	*375*	**708**	*960*	**840**	1140
M27	**320**	*435*	**733**	*995*	**1032**	*1400*	**1239**	1680
M30	**435**	*590*	**995**	*1350*	**1401**	*1900*	**1681**	2280
M33	**590**	*800*	**1349**	*1830*	**1902**	*2580*	**2278**	3090
M36	**759**	*1030*	**1740**	*2360*	**2441**	*3310*	**2935**	3980
M39	**988**	*1340*	**2249**	*3050*	**3163**	*4290*	**3798**	5150

The guides and ruler furnished below are designed to help you select the appropriate hardware.

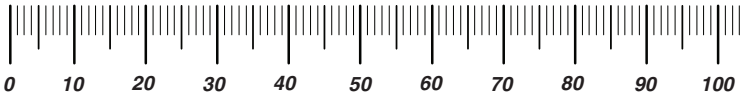

Nut, M8

Thread Diameter (mm)

Inside Diameter (in)

Threads per inch

Nut, 1/2-16

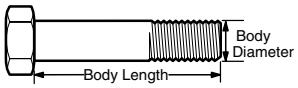

Screw, M8- 1.25 x 25

Thread Diameter (mm)

Distance between threads (mm)

Body Length (mm)

Body Diameter

Threads per inch

Body Length (in)

Screw, 1/2- 16 x 2

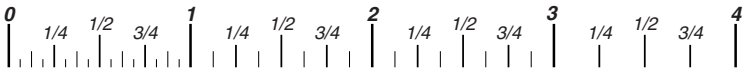

Standard Hardware Sizing

When a washer or nut is identified as **1/2"** (M8), this is the *Nominal size*, meaning the *inside diameter* is 1/2 inch (8mm metric thread diameter); if a second number is present it represents the *threads per inch* (distance between threads).

When bolt or capscrew is identified as **1/2 - 16 x 2"** (M8 - 1.25 x 50), this means the *Nominal size*, or body diameter is 1/2 inch (8mm metric thread diameter), the second number,16, represents the *threads per inch, (1.25 thread diameter).* The final number is the body length of the bolt or screw, 2 inches (50mm).

Torque Specification Chart

FOR STANDARD MACHINE HARDWARE (Tolerance ± 20%)

Hardware Grade	No Marks SAE Grade 2		SAE Grade 5		SAE Grade 8	
Size Of Hardware	*in/lbs* **ft/lbs**	Nm.	*in/lbs* **ft/lbs**	Nm.	*in/lbs* **ft/lbs**	Nm.
8-32	*19*	2.1	*30*	3.4	*41*	4.6
8-36	*20*	2.3	*31*	3.5	*43*	4.9
10-24	*27*	3.1	*43*	4.9	*60*	6.8
10-32	*31*	3.5	*49*	5.5	*68*	7.7
1/4-20	*66*	7.6	**8**	10.9	**12**	16.3
1/4-28	*76*	8.6	**10**	13.6	**14**	19.0
5/16-18	**11**	15.0	**17**	23.1	**25**	34.0
5/16-24	**12**	16.3	**19**	25.8	**29**	34.0
3/8-16	**20**	27.2	**30**	40.8	**45**	61.2
3/8-24	**23**	31.3	**35**	47.6	**50**	68.0
7/16-14	**30**	40.8	**50**	68.0	**70**	95.2
7/16-20	**35**	47.6	**55**	74.8	**80**	108.8
1/2-13	**50**	68.0	**75**	102.0	**110**	149.6
1/2-20	**55**	74.8	**90**	122.4	**120**	163.2
9/16-12	**65**	88.4	**110**	149.6	**150**	204.0
9/16-18	**75**	102.0	**120**	163.2	**170**	231.2
5/8-11	**90**	122.4	**150**	204.0	**220**	299.2
5/8-18	**100**	136	**180**	244.8	**240**	326.4
3/4-10	**160**	217.6	**260**	353.6	**386**	525.0
3/4-16	**180**	244.8	**300**	408.0	**420**	571.2
7/8-9	**140**	190.4	**400**	544.0	**600**	816.0
7/8-14	**155**	210.8	**440**	598.4	**660**	897.6
1-8	**220**	299.2	**580**	788.8	**900**	1,244.0
1-12	**240**	326.4	**640**	870.4	**1,000**	1,360.0

NOTES

1. These torque values are to be used for all hardware excluding: locknuts, self-tapping screws, thread forming screws, sheet metal screws and socket head setscrews.
2. Recommended seating torque values for locknuts:
   a. for prevailing torque locknuts - use 65% of grade 5 torques.
   b. for flange whizlock nuts and screws - use 135% of grade 5 torques.
3. Unless otherwise noted on assembly drawings, all torque values must meet this specification.

Common Hardware Types

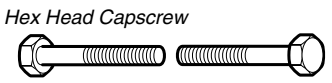

Hex Head Capscrew

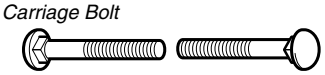

Carriage Bolt

Washer

Lockwasher

Hex Nut

Wrench & Fastener Size Guide

1/4" Bolt or Nut Wrench—7/16"

5/16" Bolt or Nut Wrench—1/2"

3/8" Bolt or Nut Wrench—9/16"

7/16" Bolt or Nut Wrench (Bolt)—5/8" Wrench (Nut)—11/16"

1/2" Bolt or Nut Wrench—3/4"

M6 Bolt or Nut Wrench—10mm

M8 Bolt or Nut Wrench—13mm

M10 Bolt or Nut Wrench—17mm

M12 Bolt or Nut Wrench—19mm

M14 Bolt or Nut Wrench—22 mm

Not for Reproduction

IT IS THE POLICY OF BRIGGS & STRATTON CORP. TO IMPROVE ITS PRODUCTS WHENEVER IT IS POSSIBLE AND PRACTICAL TO DO SO. WE RESERVE THE RIGHT TO MAKE CHANGES OR ADD IMPROVEMENTS AT ANY TIME WITHOUT INCURRING ANY OBLIGATION TO MAKE SUCH CHANGES ON PRODUCTS.

Briggs & Stratton Power Products Group

12301 W. Wirth Street
Wauwatosa, WI, 53222 USA

www.BRIGGSandSTRATTON.com
www.murray.com

© Copyright 2012 by Briggs & Stratton Corporation
Milwaukee, WI, USA. All rights reserved