This product is not serviced by Briggs & Stratton. For parts and service, please contact Husqvarna Outdoor Products (HOP) via www.husqvarna.com. Or use our dealer locator at www.murray.com to find your nearest dealer.

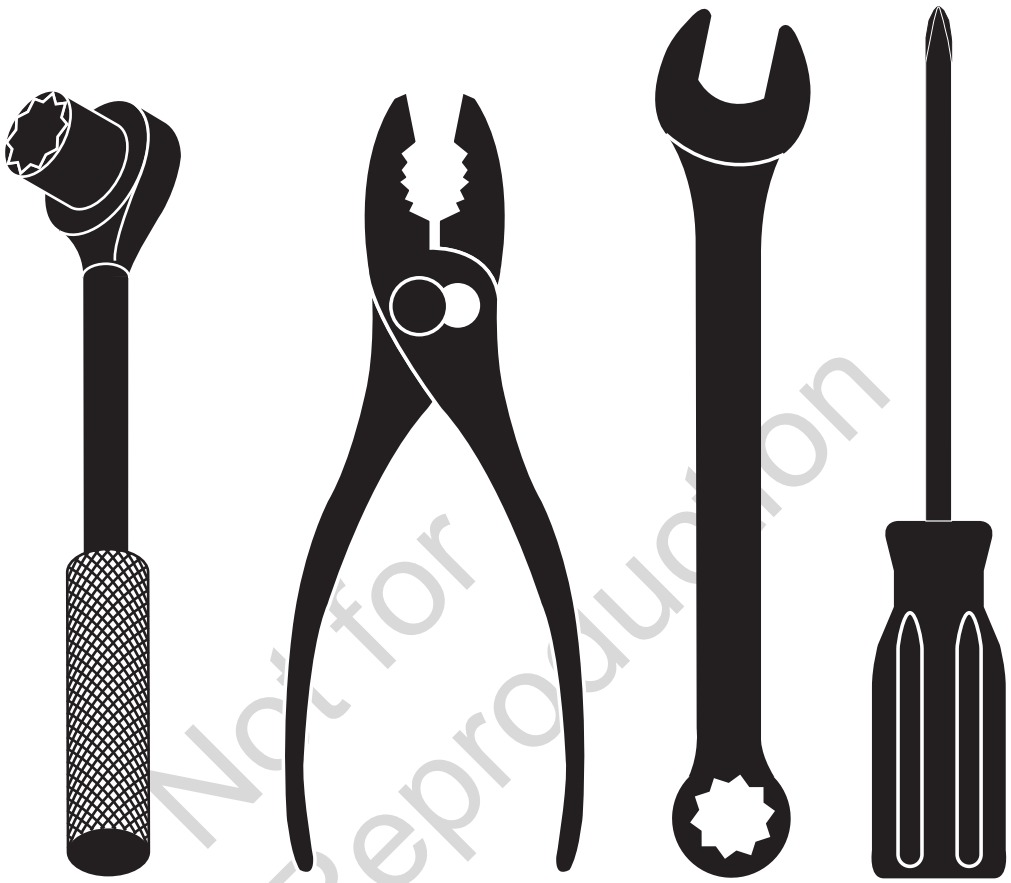

Not for Reproduction

MURRAY

Not for
Reproduction

MURRAY

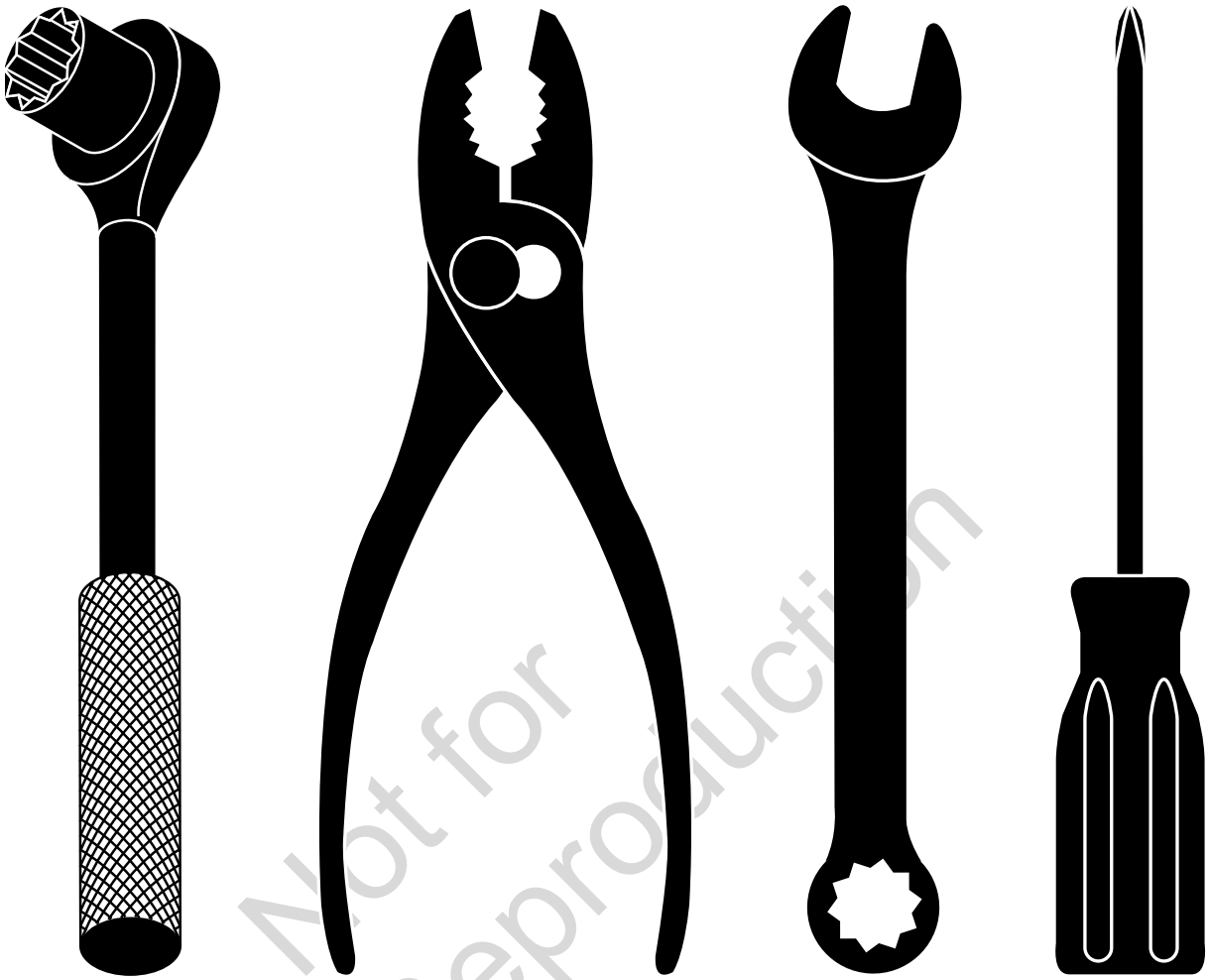

Not for Reproduction

REPAIR PARTS MANUAL

MODEL NO. **M22450**

MFG. I.D. NO. **96114002500**

Rotary Lawn Mower

For Parts and Service or Technical Assistance, call 1-800-849-1297

NOTE: Gasoline containing up to 10% ethanol (E10) is acceptable for use in this machine. The use of any gasoline exceeding 10% ethanol (E10) will void the product warranty.

446406 Rev. 2 01.27.12 BY

Printed in U.S.A.

MURRAY ROTARY LAWN MOWER - MODEL NO. **M22450** (MFG. I.D. NO. **96114002500**)

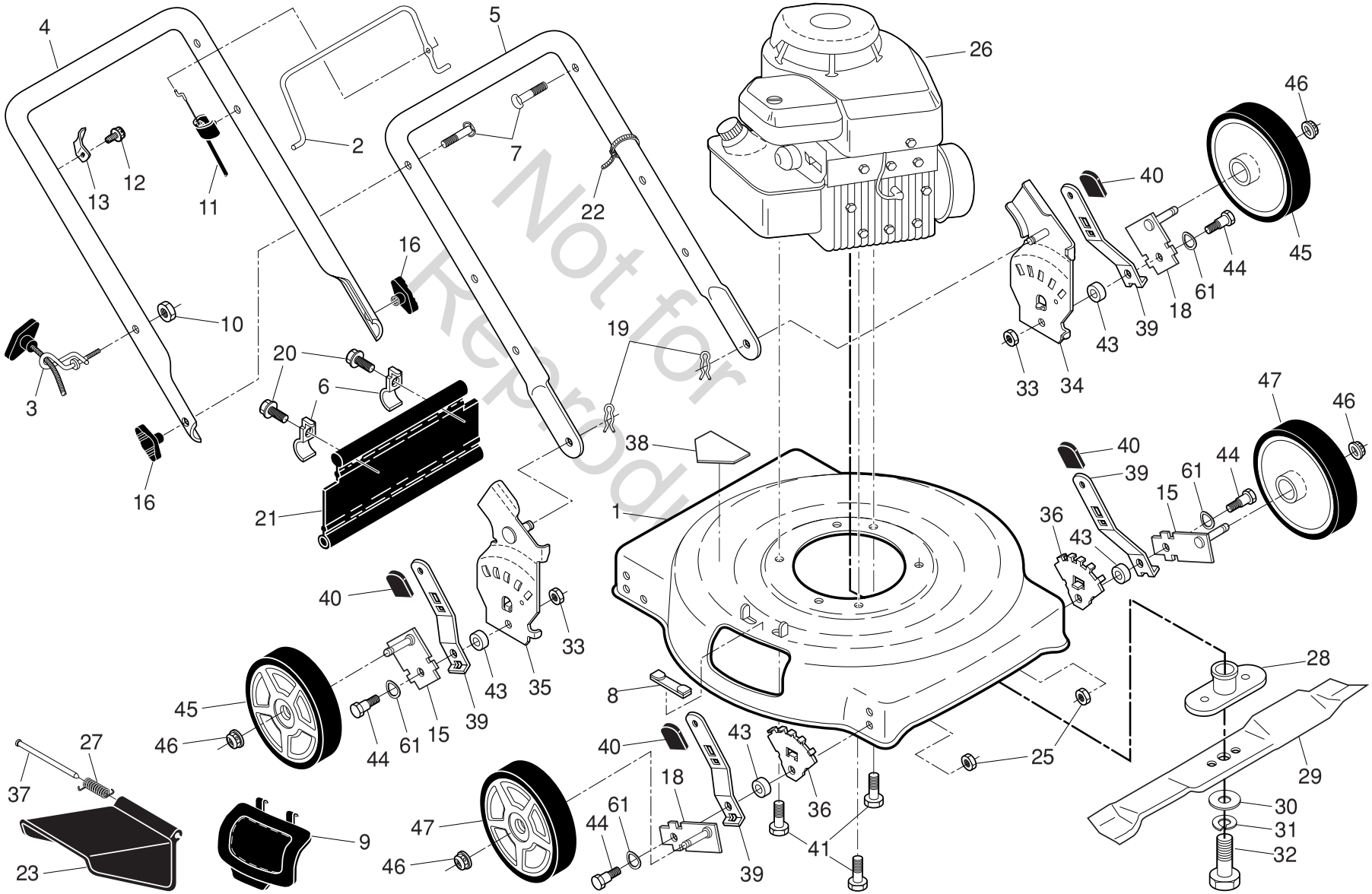

Not for Reproduction

MURRAY ROTARY LAWN MOWER - MODEL NO. **M22450** (MFG. I.D. NO. **96114002500**)

KEY NO.	PART NO.	DESCRIPTION
1	189302	Kit, Housing (Includes Key Number 38)
2	194176X428	Control Bar
3	194788	Rope Guide
4	194180X479	Upper Handle
5	432254X479	Lower Handle
6	192301X004	Shoulder Bolt 5/16-18 x 1/2
7	191574	Handle Bolt 5/16-18
8	161622	Clip, Closeout
9	160830	Mulcher Plate
10	132004	Locknut, Hex 1/4-20
11	158152	Engine Zone Control Cable
12	178848	Screw, Hex Head, Threaded, Rolled #10-16 x 5/8
13	429930X004	Up-Stop Bracket
15	401174X004	Axle Arm Assembly, Left Front & Right Rear
16	189713X428	Handle Knob
18	401175X004	Axle Arm Assembly, Right Front & Left Rear
19	51793	Hairpin Cotter
20	750097	Screw, Tapping, Hex Washer Head #10-24
21	413160	Rear Deflector
22	66426	Wire Tie
23	160831	Discharge Guard
25	426589	Nut, Hex, Flangelock 5/16-18
26	- - -	Engine, Briggs & Stratton, Model Number 9L602-1623-F1 (For engine service and replacement parts, call Briggs & Stratton at 1-800-233-3723)
27	408585	Torsion Spring
28	850977	Blade Adapter
29	406713	22" Blade
30	851074	Hardened Washer
31	850263	Helical Lockwasher 3/8
32	851084	Screw, Hex Head, Grade 8, 3/8-24 x 1-3/8
33	73930500	Nut, Hex, Flangelock 5/16-18
34	400781X479	Wheel Bracket Support, LH
35	400782X479	Wheel Bracket Support, RH
36	407494X005	Wheel Bracket Adjuster
37	160833	Hinge Rod
38	404763	Danger Decal
39	401621X004	Selector Spring
40	87877	Selector Knob
41	150406	Screw, Hex Head, Threaded, Rolled 3/8-16 x 1
43	401629	Spacer
44	401638	Shoulder Bolt 5/16-18 x .33
45	193905X460	Wheel & Tire Assembly, Rear
46	409148	Nut, Hex, Flangelock 3/8-16
47	193931X460	Wheel & Tire Assembly, Front
53	197991	Clip, Cable
61	401630	Washer, Curved, Cylindrical
- -	404764	Warning Decal (not shown)
- -	193732	Operator's Manual, English
- -	193735	Operator's Manual, Spanish
- -	446406	Repair Parts Manual, English

NOTE: All component dimensions given in U.S. inches. 1 inch = 25.4 mm.

IMPORTANT: Use only Original Equipment Manufacturer (O.E.M.) replacement parts. Failure to do so could be hazardous, damage your lawn mower and void your warranty.

Not for Reproduction

MURRAY

LIMITED WARRANTY

The Manufacturer warrants to the original consumer purchaser that this product as manufactured is free from defects in materials and workmanship. For a period of two (2) years from date of purchase by the original consumer purchaser, we will repair or replace, at our option, without charge for parts or labor incurred in replacing parts, any part which we find to be defective due to materials or workmanship. This Warranty is subject to the following limitations and exclusions.

1. This warranty does not apply to the engine, transaxle/transmission components, battery (except as noted below) or components parts thereof. Please refer to the applicable manufacturer's warranty on these items.
2. Transportation charges for the movement of any power equipment unit or attachment are the responsibility of the purchaser. Transportation charges for any parts submitted for replacement under this warranty must be paid by the purchaser unless such return is requested by the manufacturer.
3. Battery Warranty: On products equipped with a Battery, we will replace, without charge to you, any battery which we find to be defective in manufacture, during the first ninety (90) days of ownership. After ninety (90) days, we will exchange the Battery, charging you 1/12 of the price of a new Battery for each full month from the date of the original sale. Battery must be maintained in accordance with the instructions furnished.
4. The Warranty period for any products used for rental or commercial purposes is limited to 45 days from the date of original purchase.
5. This Warranty applies only to products which have been properly assembled, adjusted, operated, and maintained in accordance with the instructions furnished. This Warranty does not apply to any product which has been subjected to alteration, misuse, abuse, improper assembly or installation, delivery damage, or to normal wear of the product.
6. Exclusions: Excluded from this Warranty are belts, blades, blade adapters, normal wear, normal adjustments, standard hardware and normal maintenance.
7. In the event you have a claim under this Warranty, you must return the product to an authorized service dealer.

Not for Reproduction

Should you have any unanswered questions concerning this Warranty, contact:

Briggs and Stratton Canada
Customer Service
1195 Courtneypark Dr. East
Mississauga, Ontario
L5T-1R1

Or, Call Toll Free:
1-800-849-1297
8:30 am – 5 pm ET, Mon–Fri
and ask for Customer Service

giving the model number, serial number and date of purchase of your product and the name and address of the authorized dealer from whom it was purchased.

THIS WARRANTY DOES NOT APPLY TO INCIDENTAL OR CONSEQUENTIAL DAMAGES AND ANY IMPLIED WARRANTIES ARE LIMITED TO THE SAME TIME PERIODS STATED HEREIN FOR OUR EXPRESSED WARRANTIES. Some areas do not allow the limitation of consequential damages or limitations of how long an implied Warranty may last, so the above limitations or exclusions may not apply to you. This Warranty gives you specific legal rights, and you may have other rights which vary from locale to locale.

This is a limited Warranty within the meaning of that term as defined in the Magnuson-Moss Act of 1975.