Operator's Manual

CRAFTSMAN®

AC Generator
5600 Watt

Model No.
580.675611

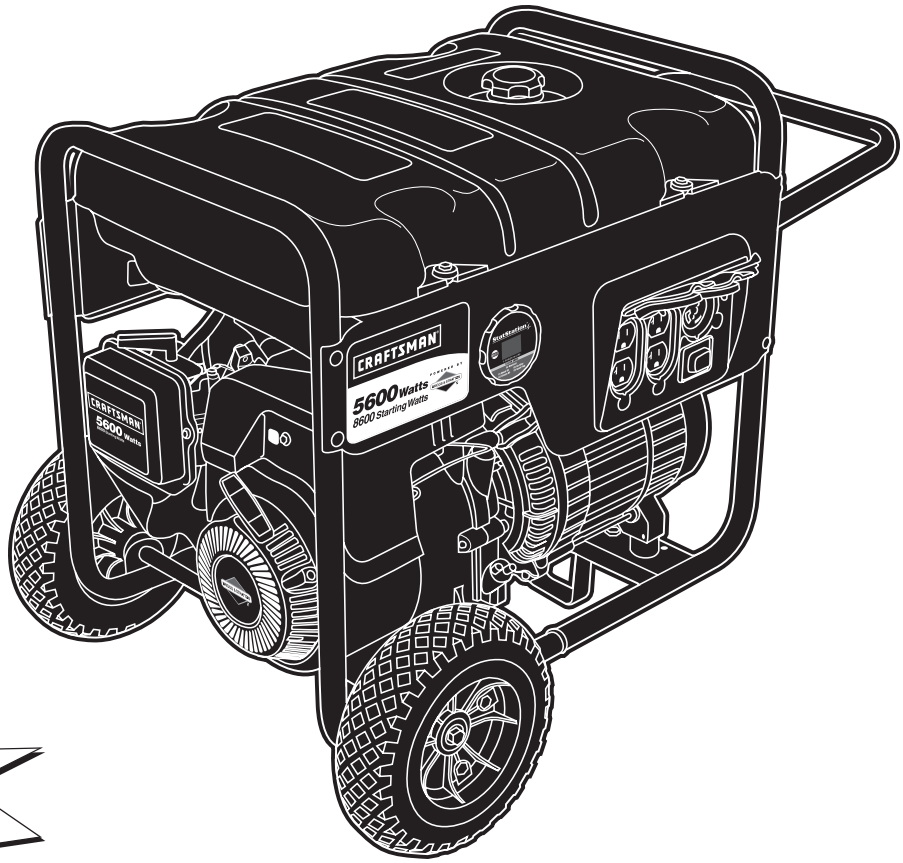

Generator
Customer Helpline
1-800-222-3136

HOURS: Mon. - Fri. 8 a.m. to 5 p.m. (CT)

- **Safety**
- **Assembly**
- **Operation**
- **Maintenance**
- **Parts**
- **Français, p. 36**

WARNING

Before using this product, read this manual and follow all Safety Rules and Operating Instructions.

AVERTISSEMENT

Avant d'utiliser ce produit, veuillez lire le manuel et suivre toutes les directives relatives à la sécurité et à l'utilisation.

This generator is rated and certified to be compliant with CSA (Canadian Standards Association) standard C22.2 No. 100-04 (motors and generators).

Les caractéristiques nominales et la certification de cette génératrice sont conformes à la norme C22.2 No. 100-04 (moteurs et génératrices) de l'ACNOR (Association canadienne de normalisation).

Sears Canada, Inc.

Visit our Craftsman website: www.sears.ca

Part No. 208433GS Draft - (09/19/2008)

0 24847 69216 7

SPECIFICATIONS

ENGINE TECHNICAL INFORMATION

This is a single cylinder, overhead valve(OHV), air cooled engine. It is a low emissions engine.

In the State of California, Model Series 200000 engines are certified by the California Air Resources Board to meet emissions standards for 250 hours. Such certification does not grant the purchaser, owner or operator of this engine any additional warranties with respect to the performance or operational life of this engine. The engine is warranted solely according to the product and emissions warranties stated elsewhere in this manual.

Power Ratings

The gross power rating for individual gas engine models is labeled in accordance with SAE (Society of Automotive Engineers) code J1940 (Small Engine Power & Torque Rating Procedure), and rating performance has been obtained and corrected in accordance with SAE J1995 (Revision 2002-05). Torque values are derived at 3060 RPM; horsepower values are derived at 3600 RPM. Actual gross engine power will be lower and is affected by, among other things, ambient operating conditions and engine-to-engine variability. Given both the wide array of products on which engines are placed and the variety of environmental issues applicable to operating the equipment, the gas engine will not develop the rated gross power when used in a given piece of power equipment (actual "on-site" or net power). This difference is due to a variety of factors including, but not limited to, accessories (air cleaner, exhaust, charging, cooling, carburetor, fuel pump, etc.), application limitations, ambient operating conditions (temperature, humidity, altitude), and engine-to-engine variability. Due to manufacturing and capacity limitations, Briggs & Stratton may substitute an engine of higher rated power for this Series engine.

This generator is rated and certified to be compliant with CSA (Canadian Standards Association) standard C22.2 No. 100-04 (motors and generators).

PRODUCT SPECIFICATIONS

Generator Specifications

Starting Wattage . . . . . 8600 Watts (8.6 kW)
Wattage . . . . . 5600 Watts (5.6 kW)
AC Voltage . . . . . 120/240 Volts
AC Current
  at 240 Volts . . . . . 23.3 Amps
  at 120 Volts . . . . . 46.6 Amps
Frequency . . . . . 60 Hz at 3600 rpm
Phase . . . . . Single Phase
Fuel Capacity . . . . . 5 U.S. gallons

Engine Specifications

Bore . . . . . 3.12 in. (79 mm)
Stroke . . . . . 2.44 in. (62 mm)
Displacement . . . . . 18.64 in. (305 cc)
Spark Plug
  Type: . . . . . Briggs & Stratton 491055 or 5066
  Set Gap To: . . . . . 0.030 inch (0.76 mm)
Armature Air Gap: . . . . . 0.008-0.012 in. (0.20-0.30 mm)
Valve clearance with valve springs installed and piston 1/4 in. (6 mm) past top dead center (check when engine is cold).
Intake . . . . . 0.004-0.006 in. (0.10-0.15 mm)
Exhaust . . . . . 0.004-0.006 in. (0.10-0.15 mm)
Oil Capacity . . . . . .28 Ounces (0.8 Liters)

NOTE: For practical operation, the generator load should not exceed 85% of rated wattage. Engine power will decrease 3-1/2% for each 1,000 feet (300 meters) above sea level and 1% for each 10° F (5.6° C) above 77° F (25° C). It should operate satisfactorily at an angle up to 15°.

CRAFTSMAN 5600 Watt AC Generator 580.675611

Génératrice CRAFTSMAN de 5,600 Watts 580.675611

Main Unit — Exploded View **Unité principale — Vue éclatée**

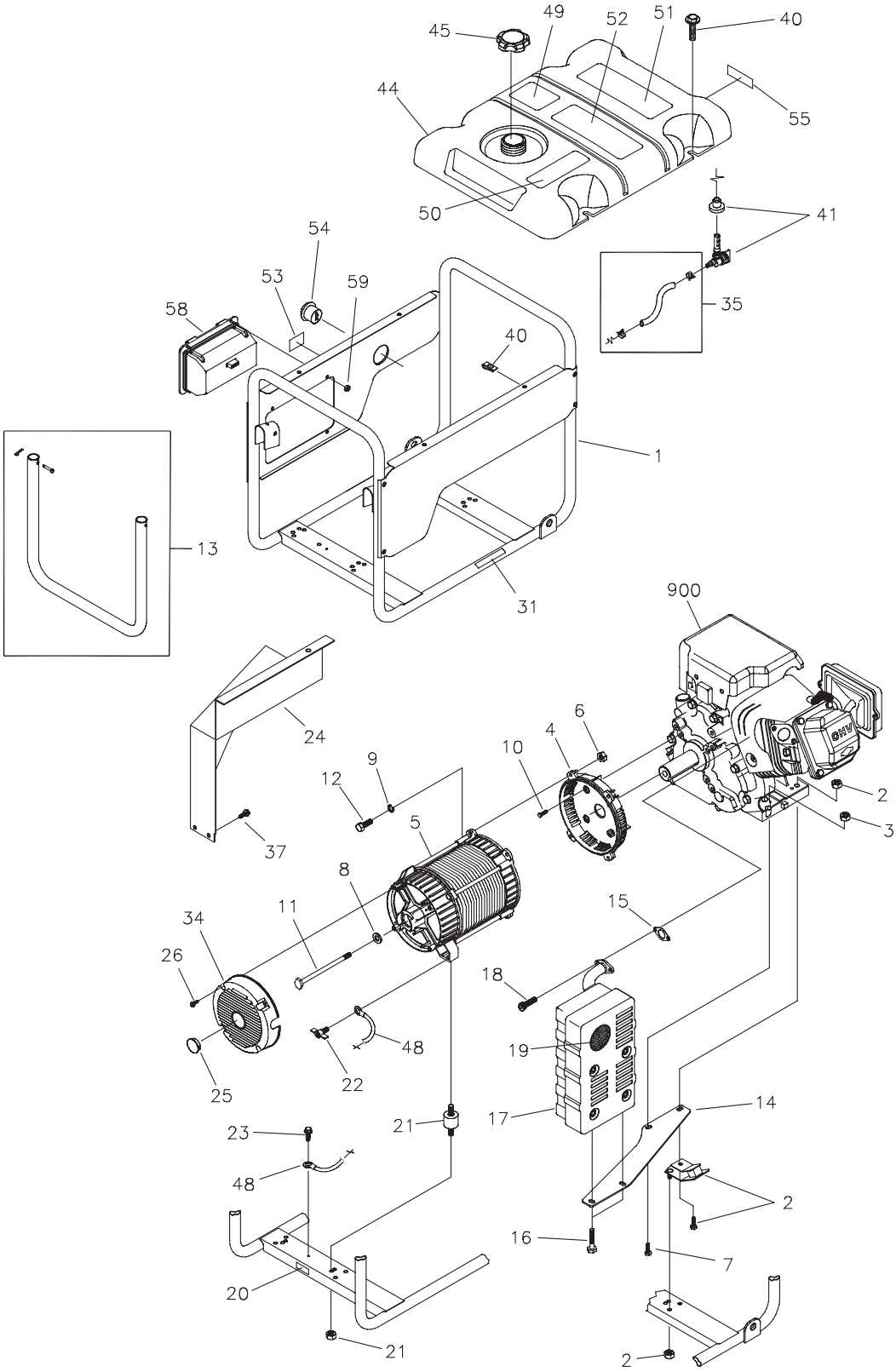

CRAFTSMAN 5600 Watt AC Generator 580.675611
Génératrice CRAFTSMAN de 5,600 Watts 580.675611
Main Unit — Parts List Unité principale — Liste des pièces

Item Article	Part # Pièce no.	Description Description
1	201885GS	ASSY, Cradle (Includes Items 20, 31 & 53) (ENSEMBLE, berceau (inclut les articles 20, 31 & 53))
2	194150GS	KIT, Vibration, Mount, 45° (ENSEMBLE, Montant antivibratile, 45°)
3	67989GS	NUT, M8 Flange Serrated (ÉCROU, M8 à embase cannelée)
4	190220GS	HOUSING, Engine Adapter (BÂTI, adaptateur de moteur)
5	NSP	ASSY, Alternator (see page 27) (ENSEMBLE, alt (voir page 27))
6	*	NUT, Hex M8 - 1.25 (ÉCROU, hexagonaux M8 - 1.25)
7	195398GS	TPHMS, M8 - 1.25 x 35 (TPHMS, M8 - 1.25 x 35)
8	96796GS	WASHER, M8 Flat (RONDELLE, M8 plate)
9	*	WASHER, Lock 5/16 - M8 (RONDELLE, blocage 5/16" - M8)
10	*	SBHCS, 3/8-16 x 1.0 Lg. (SBHCS, 3/8-16 x 1.0 L.)
11	187365FGS	HHCS, 5/16-24 x 7.44 (HHCS, 5/16-24 x 7.44)
12	*	HHCS, M8 - 1.25 x 25 (HHCS, M8 - 1.25 x 25)
13	198763GS	KIT, Handle (ENSEMBLE, poignée)
14	189009GS	BRACKET, Muffler (SUPPORT, Silencieux)
15	695398	GASKET, Exhaust (JOINT D'ÉTANCHÉITÉ, échappement)
16	*	HHCS, M6 - 1.0 x 12 w/LW (HHCS, M6 - 1.0 x 12 a/LW)
17	189008GS	MUFFLER (SILENCIEUX)
18	*	SCREW, 5/16 - 18 x 7/8" (VIS, 5/16 - 18 x 7/8")
19	83083GS	SCREEN, Spark Arrest (ÉCRAN, pare-étincelles)
20	B4986GS	DECAL, Ground, Green (DÉCALQUE, mise à la terre, vert)
21	194153GS	KIT, Vibration Mount (ENSEMBLE, Montant antivibratile)
22	86494GS	SCREW, Wing M6 - 1.0 x 16 (VIS, oreilles M6 - 1.0 x 16)
23	B2153GS	SCREW, 12 - 14 x 7/8, Self Drill (VIS, 12 - 14 x 7/8", autoperceuse)
24	197424GS	SHIELD, Heat (ÉCRAN, thermique)
25	191190GS	CAP (TÊTE)
26	74908GS	SCREW, M5-0.8 x 10, Taptite (VIS, M5-0.8 x 10, Taptite)
31	200310GS	DECAL, Exhaust Warning (DÉCALQUE, avertissement d'échappement)
34	195422GS	COVER, Bearing Carrier with Cap (COUVERCLE, support de rondelle de butée avec bouchon)
35	791745	KIT, Fuel Hose (cut to fit) (ENSEMBLE, tuyau de carburant (couper selon les besoins))
37	56893GS	CRIMPTITE, 10-24 x 1/2 (CRIMPTITE, 10-24 x 1/2)
40	199433GS	KIT, Fuel Tank Hrdwr w/U-Clips (ENSEMBLE, quincaillerie de réservoir d'essence a/attaches en U)
	199284GS	U-CLIPS, (Optional Accessory) (ATTACHES EN U, (accessoire optionnel))
41	192980GS	KIT, Valve, Fuel Tank (ENSEMBLE, soupape, réservoir d'essence)
44	200814GS	ASSY, Tank, Fuel (Includes Items 41, 50, 51, 52 & 55) (ENSEMBLE, réservoir, essence (inclut les articles 41, 50, 51, 52 & 55))
45	198912GS	FUEL CAP, Fresh Start ® (BOUCHON DE RÉSERVOIR, Fresh Start®)
48	195373GS	WIRE, Ground (FIL, mise à la terre)
49	202997GS	DECAL, CO Warning (DÉCALQUE, avertissement, CO)
50	188333GS	DECAL, Gas Fill (DÉCALQUE, remplissage d'essence)
51	194984GS	DECAL, Warning, French (DÉCALQUE, avertissement, français)
52	94480GS	DECAL, Start Instructions, French (DÉCALQUE, directives de démarrage, français)
53	200311GS	DECAL, Neutral Bonded (DÉCALQUE, neutre raccordé)
54	196908GS	LOAD MONITOR (MONITEUR DE CHARGE)
55	197798GS	DECAL, Shut-Off, Fuel (DÉCALQUE, arrêt de carburant)
58	202529GS	ASSY, Control Panel (see page 26) (ENSEMBLE, tableau de commande (voir page 26))
59	*	NUT, Palnut, 3/16" (ÉCROU, autofileteur, 3/16")
900	NSP	ENGINE (204412-0163-E1) (MOTEUR (204412-0163-E1))
Parts Not Illustrated (Articles non illustrés)		
	208433GS	MANUAL, Operator's (MANUEL, utilisation)
	AB3061GS	BOTTLE, Oil (BOUTEILLE, huile)
	5097D	CARTRIDGE, Fresh Fuel (CARTOUCHE, essence fraîche)
	197474GS	CORDSET, Storm (CORDON, Storm)
	200815GS	KIT, Decals (ENSEMBLE, décalques)

* - Items without part numbers are common fasteners and are available at local hardware stores.

* - Les articles sans numéro de pièce sont des pièces de fixation usuelles disponibles dans les quincailleries locales.

CRAFTSMAN 5600 Watt AC Generator 580.675611

Génératrice CRAFTSMAN de 5,600 Watts 580.675611

Control Panel — Exploded View and Parts List

Tableau de commande — Vue éclatée et liste des pièces

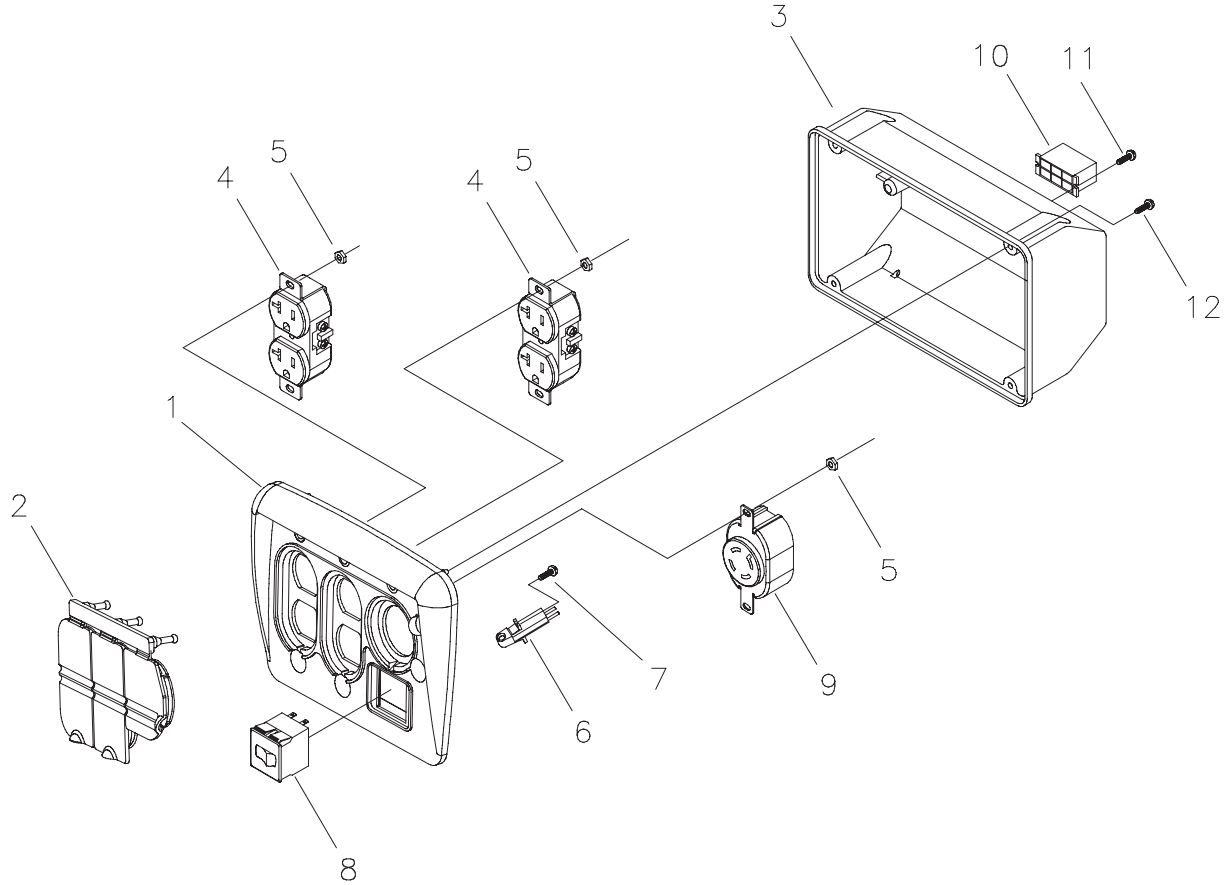

Item Article	Part # Pièce no.	Description Description
1	197471GS	PANEL, Control (TABLEAU, commande)
2	197472GS	COVER, Outlet Flip (COUVERCLE, sortie à rabat)
3	188890GS	COVER, Back Panel (COUVERCLE, tableau arrière)
4	197731GS	OUTLET, 120V, 15/20A Dplx (PRISE, 120 V, 15/20 A double)
5	189165GS	NUT, 5/32 Pal (ÉCROU, 5/32 Pal)
6	197729GS	MODULE, Led (MODULE, DEL)
7	197958GS	SCREW, 3 x 6, Tapping (VIS, 3 x 6, autotaraudeuse)
8	202030GS	BREAKER, Circuit, 20A (DISJONCTEUR, 20 A)
	191481GS	BOOT, Breaker Circuit (not shown) (GAINE, disjoncteur (non montré))
9	43437GS	OUTLET, 120/240V, 30A (PRISE, 120/240 V, 30 A)
10	22694GS	HOUSING, Rcptcl, 6 Pin (BÂTI, prise, 6 broches)
11	82308GS	SCREW, 3 x 18, Tapping (VIS, 3 x 18, autotaraudeuse)
12	192241GS	SCREW, 3.5 x 14, Tapping (VIS, 3.5 x 14, autotaraudeuse)

CRAFTSMAN 5600 Watt AC Generator 580.675611

Génératrice CRAFTSMAN de 5,600 Watts 580.675611

Alternator — Exploded View & Parts List

Alternateur — Vue éclatée et liste des pièces

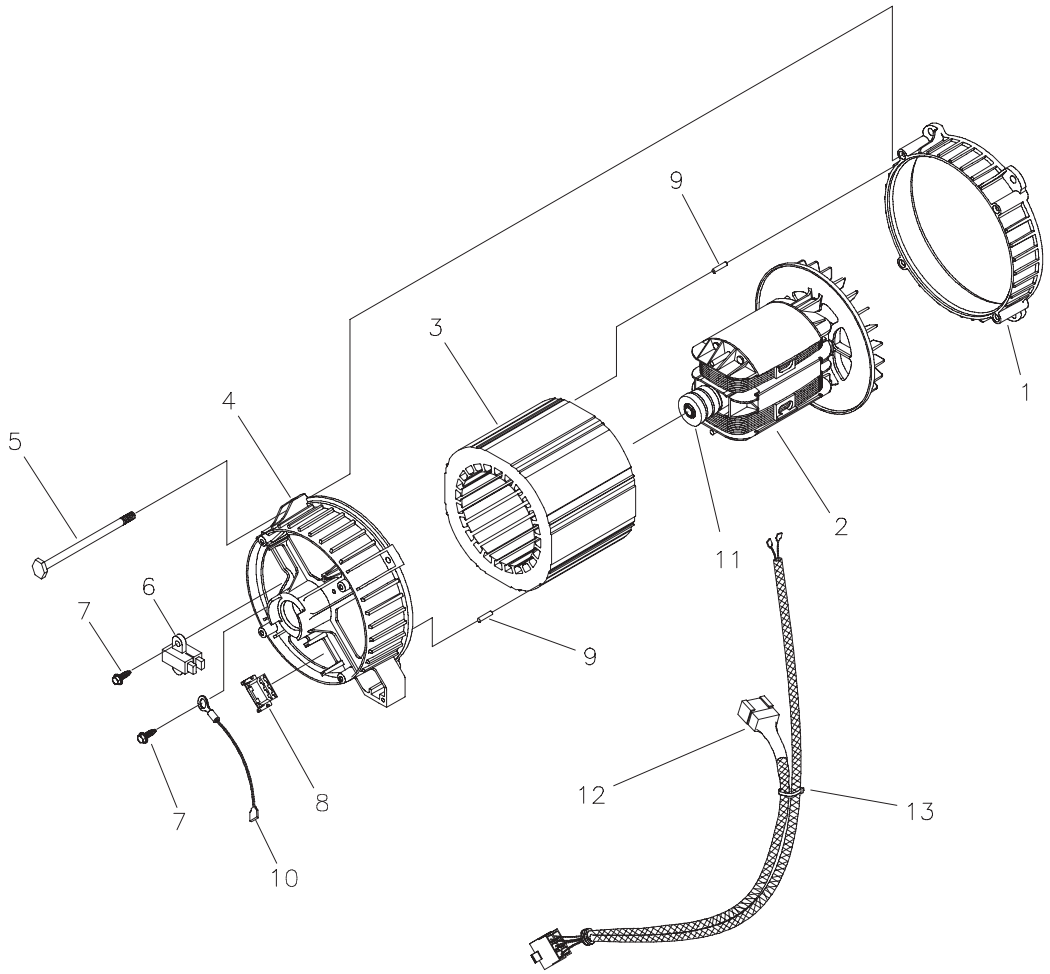

Item Article	Part # Pièce no.	Description Description
1	186059GS	ADAPTER, Mounting, Alternator (ADAPTATEUR, assemblage, alternateur)
2	190032GS	ASSY, Rotor (Includes Item 11) (ENSEMBLE, rotor (inclut l'article 11))
3	190079AGS	STATOR (STATOR)
4	186060GS	RBC, with O-Ring (p/n 189197GS) (RBC, avec joint torique (n/p 189197GS))
5	86308HGS	HHCS, M6 - 1.0 x 140 SEMS (HHCS, M6 - 1.0 x 140 SEMS)
6	91825GS	ASSY, Holder, Rectifier/Brush (ENSEMBLE, support, redresseur/brosse)
7	66849GS	TAPTITE, M5 - 0.8 x 16 (TAPTITE, M5 - 0.8 x 16)
8	22694GS	RECEPTACLE, 6 pin (PRISE, 6 broches)
9	81917GS	PIN, Roll, 4mm x 10 (AXE, rouleau, 4 mm x 10)
10	193428AGS	ASSY, Wire, Ground (ENSEMBLE, fil, mise à la terre)
11	65791GS	BEARING (ROULEMENT À BILLES)
12	198779GS	HARNESS, Wire, Power (FAISCEAUX, fil)
13	*	TIEWRAP, Black (ATTACHE AUTOBLOCANTE, noire)

* - Items without part numbers are common fasteners and are available at local hardware stores.
* - Les articles sans numéro de pièce sont des pièces de fixation usuelles disponibles dans les quincailleries locales.

CRAFTSMAN 5600 Watt AC Generator 580.675611

Génératrice CRAFTSMAN de 5,600 Watts 580.675611

Wheel Kit — Exploded View and Parts List

Ensemble de roues — Vue éclatée et liste des pièces

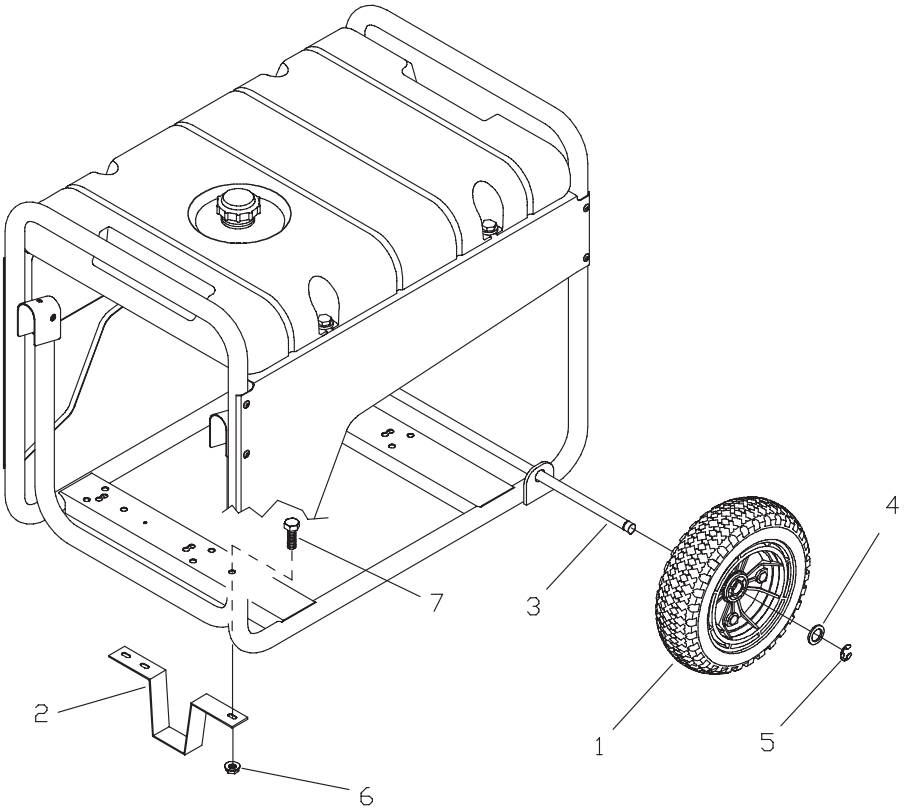

Item Article	Part # Pièce no.	Description Description
1	196517GS	WHEEL (ROUE)
2	B1764GS	SUPPORT, Wheel Kit (SUPPORT, assemblage des roues)
3	191267HGS	AXLE (ESSIEU)
4	*	WASHER, 5/8" (RONDELLE, 5/8")
5	191265GS	E-RING (ANNEAU EN E)
6	67989GS	NUT, M8 - Flange Serrated (ÉCROU, M8 – à embase cannelée)
7	*	HHCS, M8 - 1.25 x 16 (HHCS, M8 - 1.25 x 16)

Parts Not Illustrated (Articles non illustrés)

	197594GS	SUBKIT, Hardware (SUBKIT, Matériel)

* - Items without part numbers are common fasteners and are available at local hardware stores.

* - Les articles sans numéro de pièce sont des pièces de fixation usuelles disponibles dans les quincailleries locales.