Illustrated Parts List

MODEL
076080-00

Not for Reproduction

30,000 Watt Liquid Cooled Standby Generator System

IPL No. 1757520 Rev. - 9/17/2013

Not for
Reproduction

PRODUCT COMPONENTS **PAGES**

Main Unit 4
Control Panel 6
Enclosure 8
Engine Group 10
Engine Group - Common Service Parts - 1.6L Engine 12
Engine Group - Fuel Components 14
Manuals and Accessories 16
Torque Specification Chart ..... Inside Back Cover

Not for Reproduction

Exploded View - Main Unit

NOTE: Unless noted otherwise, use the standard hardware torque specification chart.

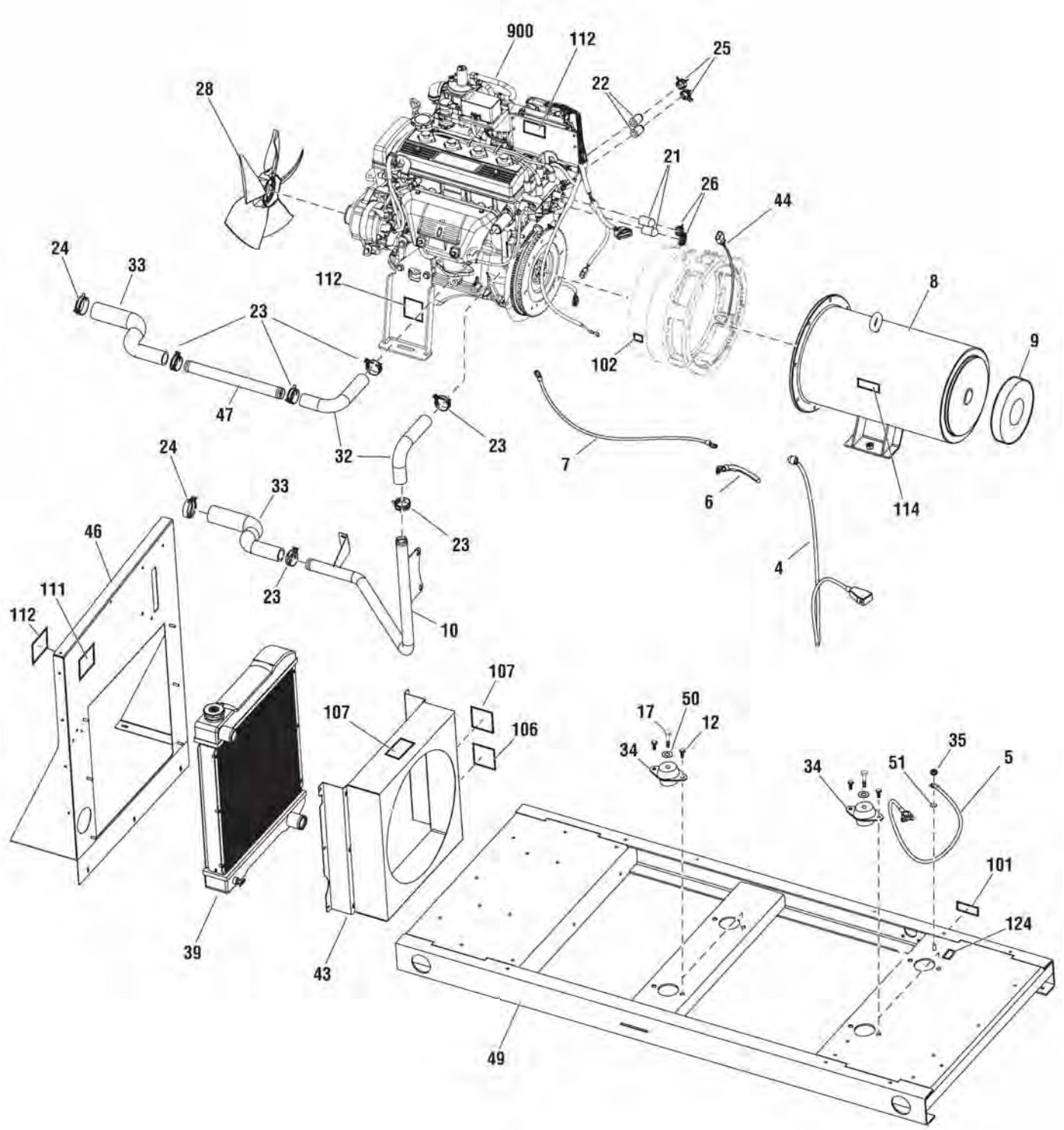

The above parts group applies to the following Mfg. Nos.:

076080-00 - 30,000 Watt LC Standby Generator (GE)

Briggs & Stratton Products Group, LLC
Copyright © 2013 by Briggs & Stratton Corporation
Milwaukee, WI, USA. All rights reserved

Parts List - Main Unit

Ref.	Part No.	Description	Ref.	Part No.	Description
4	318369GS	WIRE			
5	318370GS	WIRE			
6	318371GS	WIRE			
7	318372GS	WIRE			
8	704273	ALTERNATOR			
9	704376	RECTIFIER			
10	318521GS	HOSE			
12	-----	* CAPSCREW, Hex Head Flange, M10 x 1.5 x 20			
17	-----	* CAPSCREW, Hex Head, M12 x 1.75 x 75			
21	319775GS	CAP			
22	319776GS	CAP			
23	318541GS	CLAMP			
24	318542GS	CLAMP			
25	704218	CLAMP			
26	704219	CLAMP			
28	704220	FAN			
32	318520GS	HOSE			
33	318519GS	HOSE			
34	204653GS	MOUNT-VIBRATION			
35	-----	* NUT, Flange, M8			
39	318373GS	RADIATOR (Includes cap & petcock)			
43	319018GS	COVER-FAN			
44	318724GS	SENSOR			
46	317569GS	SUPPORT			
47	318522GS	HOSE			
49	-----	BASE			
50	-----	* WASHER, Flat, M12			
51	-----	* WASHER, Ext Lock, M10			
101	186643GS	DECAL			
102	186649GS	DECAL			
106	704323	DECAL			
107	205392GS	DECAL			
111	205396GS	DECAL			
112	205398GS	DECAL			
114	205401GS	DECAL			
124	B4986AGS	DECAL			
900	-----	** ENGINE			

Not for Reproduction

Footnotes:

* Items without part numbers are common fasteners and are available at your local hardware store.
** Contact Briggs & Stratton for parts and service.

The above parts group applies to the following Mfg. Nos.:

076080-00 - 30,000 Watt LC Standby Generator (GE)

Briggs & Stratton Products Group, LLC
Copyright © 2013 by Briggs & Stratton Corporation
Milwaukee, WI, USA. All rights reserved

Exploded View - Control Panel

NOTE: Unless noted otherwise, use the standard hardware torque specification chart.

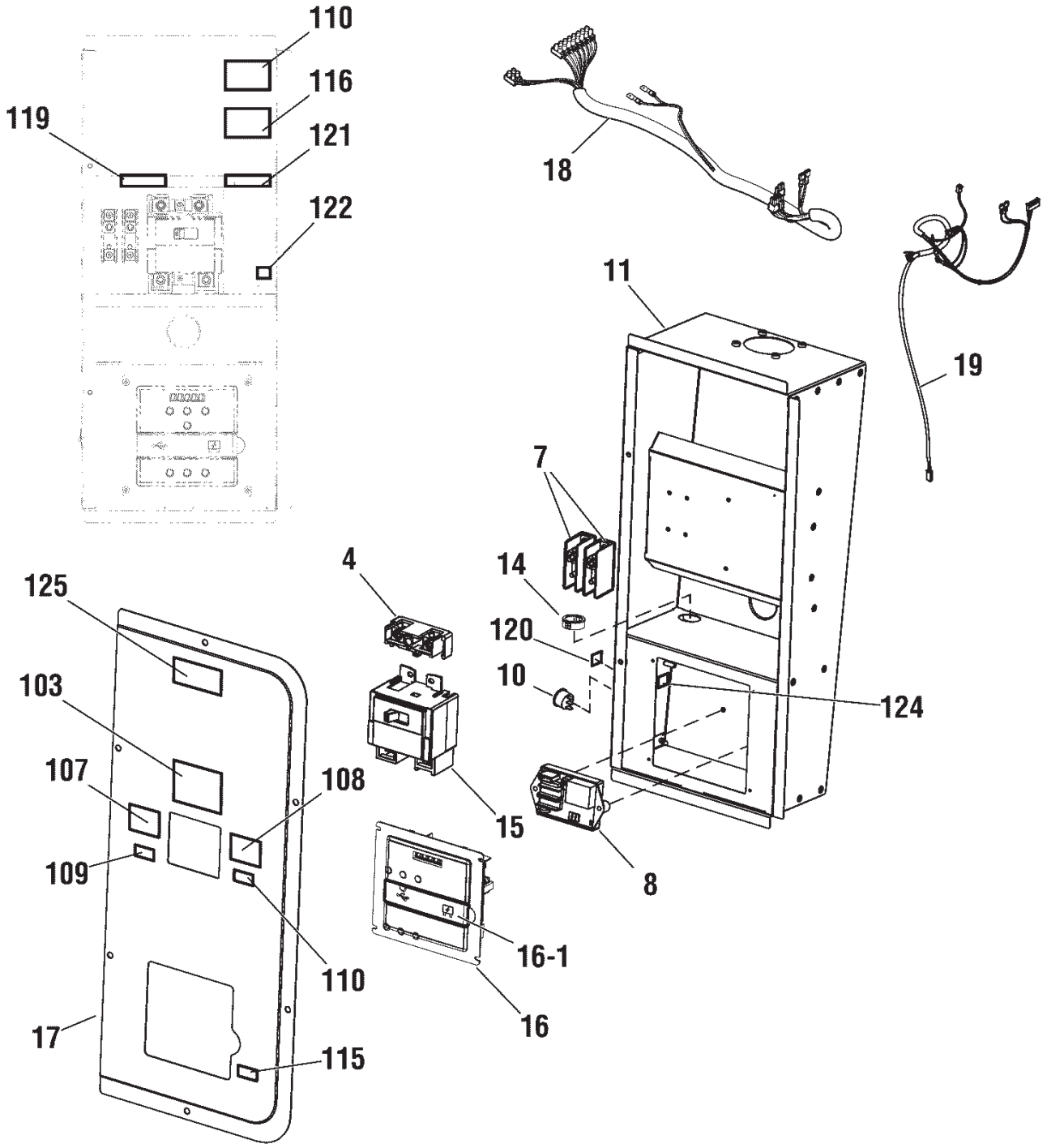

The above parts group applies to the following Mfg. Nos.:

076080-00 - 30,000 Watt LC Standby Generator (GE)

Briggs & Stratton Products Group, LLC
Copyright © 2013 by Briggs & Stratton Corporation
Milwaukee, WI, USA. All rights reserved

Parts List - Control Panel

Ref.	Part No.	Description	Ref.	Part No.	Description
4	204530GS	LUG			
7	208365GS	TERMINAL BLOCK			
8	209856GS	VOLTAGE REGULATOR			
10	315551GS	SWITCH-ROCKER			
11	317636GS	BOX-CONTROL PANEL			
14	704265	BUSHING			
15	209168GS	CIRCUIT BREAKER			
16	314618GS	PANEL-CONTROL			
16-1	319009GS	DOOR			
17	BA317637GS	COVER, DOOR			
18	314639GS	HARNESS-WIRE			
19	319686GS	HARNESS-WIRE			
103	193297GS	DECAL			
107	205392GS	DECAL			
108	205393GS	DECAL			
109	205394GS	DECAL			
110	205395GS	DECAL			
115	207241GS	DECAL			
116	207242GS	DECAL			
119	313585GS	DECAL			
120	315555GS	DECAL			
121	317368GS	DECAL			
122	317371GS	DECAL			
124	B4986AGS	DECAL			
125	B5082AGS	DECAL			

Not for Reproduction

Footnotes:

The above parts group applies to the following Mfg. Nos.:

076080-00 - 30,000 Watt LC Standby Generator (GE)

Briggs & Stratton Products Group, LLC
Copyright © 2013 by Briggs & Stratton Corporation
Milwaukee, WI, USA. All rights reserved

Exploded View - Enclosure

NOTE: Unless noted otherwise, use the standard hardware torque specification chart.

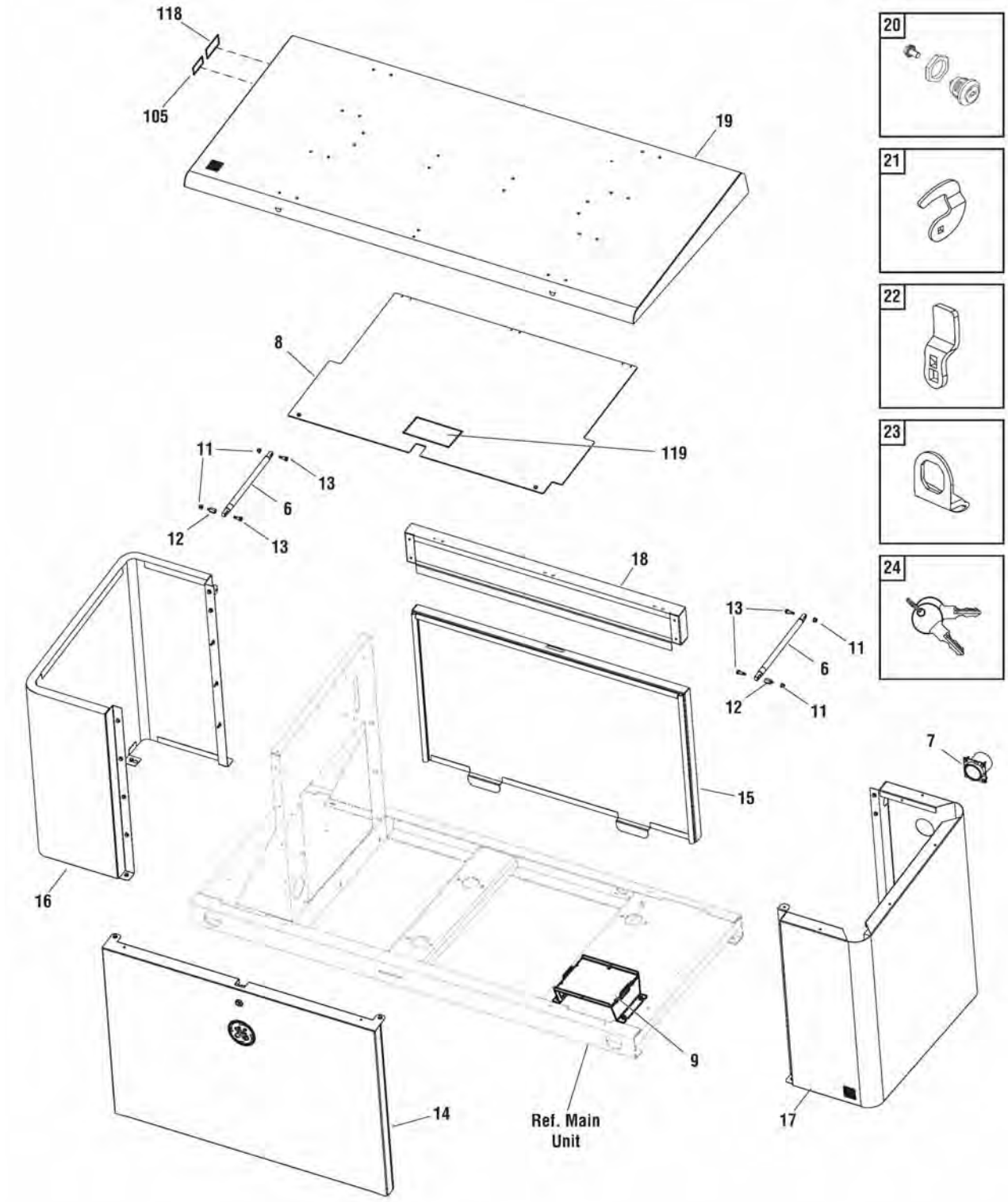

The above parts group applies to the following Mfg. Nos.:

076080-00 - 30,000 Watt LC Standby Generator (GE)

Briggs & Stratton Products Group, LLC
Copyright © 2013 by Briggs & Stratton Corporation
Milwaukee, WI, USA. All rights reserved

Parts List - Enclosure

Ref.	Part No.	Description	Ref.	Part No.	Description
6	314649GS	SPRING			
7	BH318007GS	FITTING			
8	318597GS	GUARD			
9	BA319333GS	TRAY-BATTERY			
11	-----	* NUT, Hex Flange, M6			
12	704297	ADAPTER			
13	-----	* BOLT, Shoulder, M6, 8 x 12			
14	704251	DOOR-FRONT (Includes Ref. Nos. 20 & 21)			
15	704252	DOOR-BACK (Includes Ref. Nos, 20, 22 & 23)			
16	704253	BULKHEAD			
17	704257	BULKHEAD			
18	704259	RAIL-DOOR			
19	704261	ROOF			
20	314619GS	LATCH			
21	315443GS	LATCH-ARM (Front Door)			
22	196001GS	LATCH-ARM (Back Door)			
23	704295	TAB-PULL			
24	314290GS	KEY			
105	195642GS	DECAL-RAINPROOF			
118	208538GS	DECAL			
119	205399GS	DECAL			

Not for Reproduction

Footnotes:

The above parts group applies to the following Mfg. Nos.:

076080-00 - 30,000 Watt LC Standby Generator (GE)

Briggs & Stratton Products Group, LLC
Copyright © 2013 by Briggs & Stratton Corporation
Milwaukee, WI, USA. All rights reserved

Exploded View - Engine Group

NOTE: Unless noted otherwise, use the standard hardware torque specification chart.

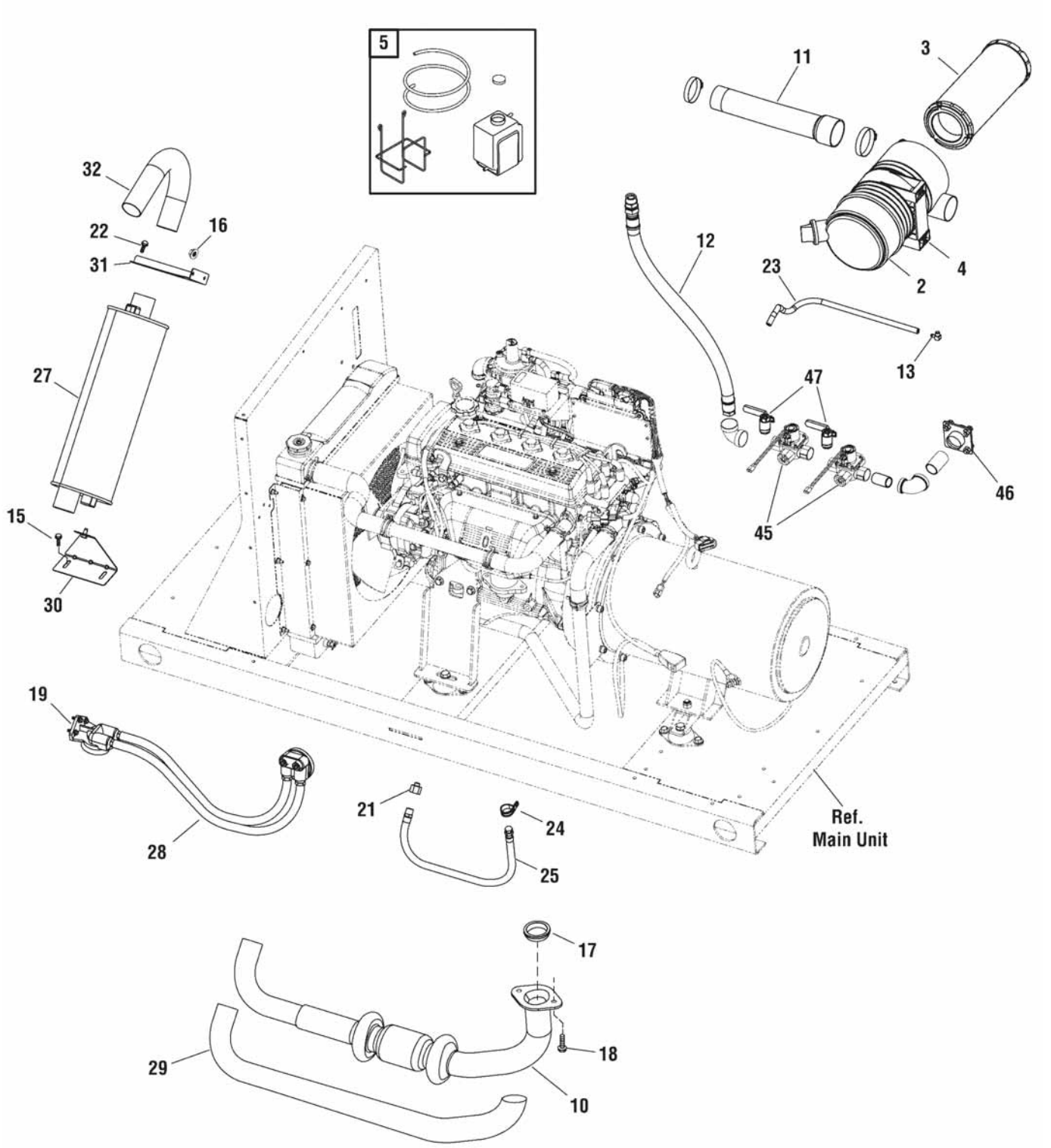

The above parts group applies to the following Mfg. Nos.:

076080-00 - 30,000 Watt LC Standby Generator (GE)

Briggs & Stratton Products Group, LLC
Copyright © 2013 by Briggs & Stratton Corporation
Milwaukee, WI, USA. All rights reserved

Parts List - Engine Group

Ref.	Part No.	Description	Ref.	Part No.	Description
2	204274GS	AIR CLEANER (Includes Ref. No. 3)			
3	207575GS	FILTER-CARTRIDGE			
4	205103GS	CLAMP			
5	205226GS	BOTTLE-OVERLFOW			
10	317579GS	EXHAUST			
11	317755GS	TUBE			
12	318595GS	HOSE-FUEL			
13	319774GS	FITTING			
15	-----	* BOLT, Flange, M6 x 1.0 x 20			
16	-----	* NUT, Hex Flange, Nylon Insert, M6			
17	704268	GASKET			
18	-----	* BOLT, Flange, M10 x 1.25 x 30			
19	704267	ADAPTER-OIL FILTER			
21	704337	ADAPTER			
22	-----	* SCREW, 5/16-18 x 5/8			
23	704269	HOSE, FUEL			
24	704270	CLAMP			
25	704271	HOSE-OIL DRAIN			
27	704272	MUFFLER			
28	704274	HOSE			
29	206985GS	INSULATION			
30	704275	BRACKET			
31	704276	BRACKET			
32	704277	DIFFUSER			
45	314110GS	VALVE-FUEL			
46	BC310518GS	COUPLING			
47	312788GS	VALVE-BALL			

Not for Reproduction

Footnotes:

The above parts group applies to the following Mfg. Nos.:

076080-00 - 30,000 Watt LC Standby Generator (GE)

Briggs & Stratton Products Group, LLC
Copyright © 2013 by Briggs & Stratton Corporation
Milwaukee, WI, USA. All rights reserved

Exploded View - Engine Group - Common Service Parts - 1.6L Engine

NOTE: Unless noted otherwise, use the standard hardware torque specification chart.

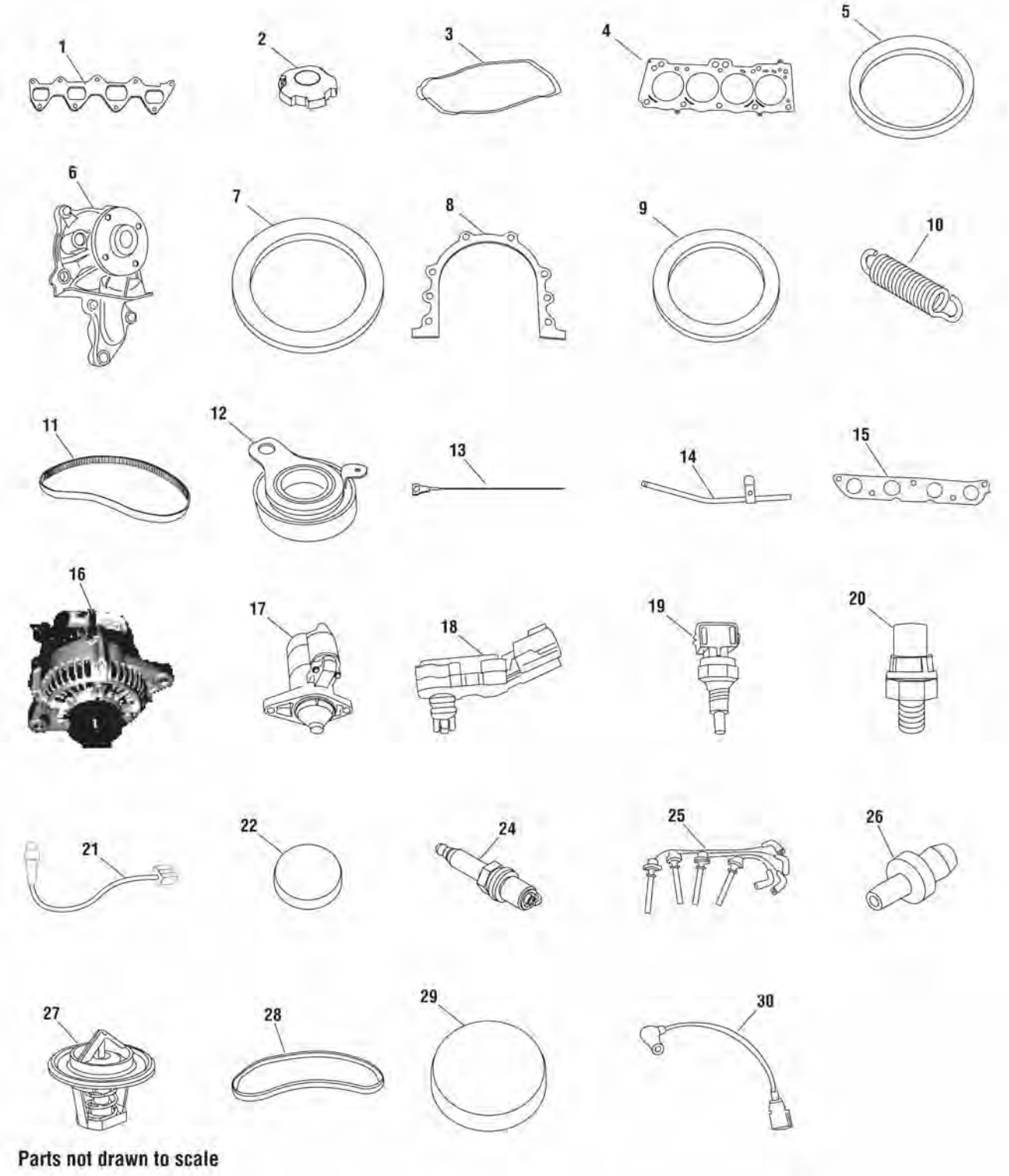

The above parts group applies to the following Mfg. Nos.:

076080-00 - 30,000 Watt LC Standby Generator (GE)

Briggs & Stratton Products Group, LLC
Copyright © 2013 by Briggs & Stratton Corporation
Milwaukee, WI, USA. All rights reserved

Parts List - Engine Group - Common Service Parts - 1.6L Engine

Ref.	Part No.	Description	Ref.	Part No.	Description
1	318472GS	GASKET-INTAKE MANIFOLD			
2	318702GS	CAP-OIL			
3	318703GS	GASKET-VALVE COVER			
4	318705GS	GASKET-HEAD			
5	318706GS	O-RING-WATER PUMP			
6	318708GS	WATER PUMP			
7	318709GS	SEAL-FRONT CRANK			
8	318710GS	GASKET-REAR MAIN			
9	318711GS	SEAL-REAR MAIN			
10	318712GS	SPRING-TENSIONER, TIMING BELT			
11	318713GS	BELT-TIMING			
12	318714GS	TENSIONER-TIMING BELT			
13	318717GS	DIPSTICK			
14	318718GS	TUBE-DIPSTICK			
15	318719GS	GASKET-EXHAUST MANIFOLD			
16	318720GS	ALTERNATOR-ENGINE			
17	318721GS	STARTER			
18	318722GS	SENSOR-MAP			
19	318723GS	SENSOR-COOANT			
20	318725GS	SENSOR-OIL PRESSURE			
21	318726GS	SENSOR-OXYGEN			
22	318727GS	PLUG-FREEZE, 35mm			
24	318729GS	SPARK PLUG (Qty. 1)			
25	318730GS	WIRE-SPARK PLUG SET			
26	318734GS	PCV VALVE			
27	318735GS	THERMOSTAT			
28	318737GS	BELT			
29	319370GS	PLUG-FREEZE, 40mm			
30	318724GS	SENSOR-CRANK POSITION			

Not for Reproduction

Footnotes:

The above parts group applies to the following Mfg. Nos.:

076080-00 - 30,000 Watt LC Standby Generator (GE)

Briggs & Stratton Products Group, LLC
Copyright © 2013 by Briggs & Stratton Corporation
Milwaukee, WI, USA. All rights reserved

Exploded View - Engine Group - Fuel Components

NOTE: Unless noted otherwise, use the standard hardware torque specification chart.

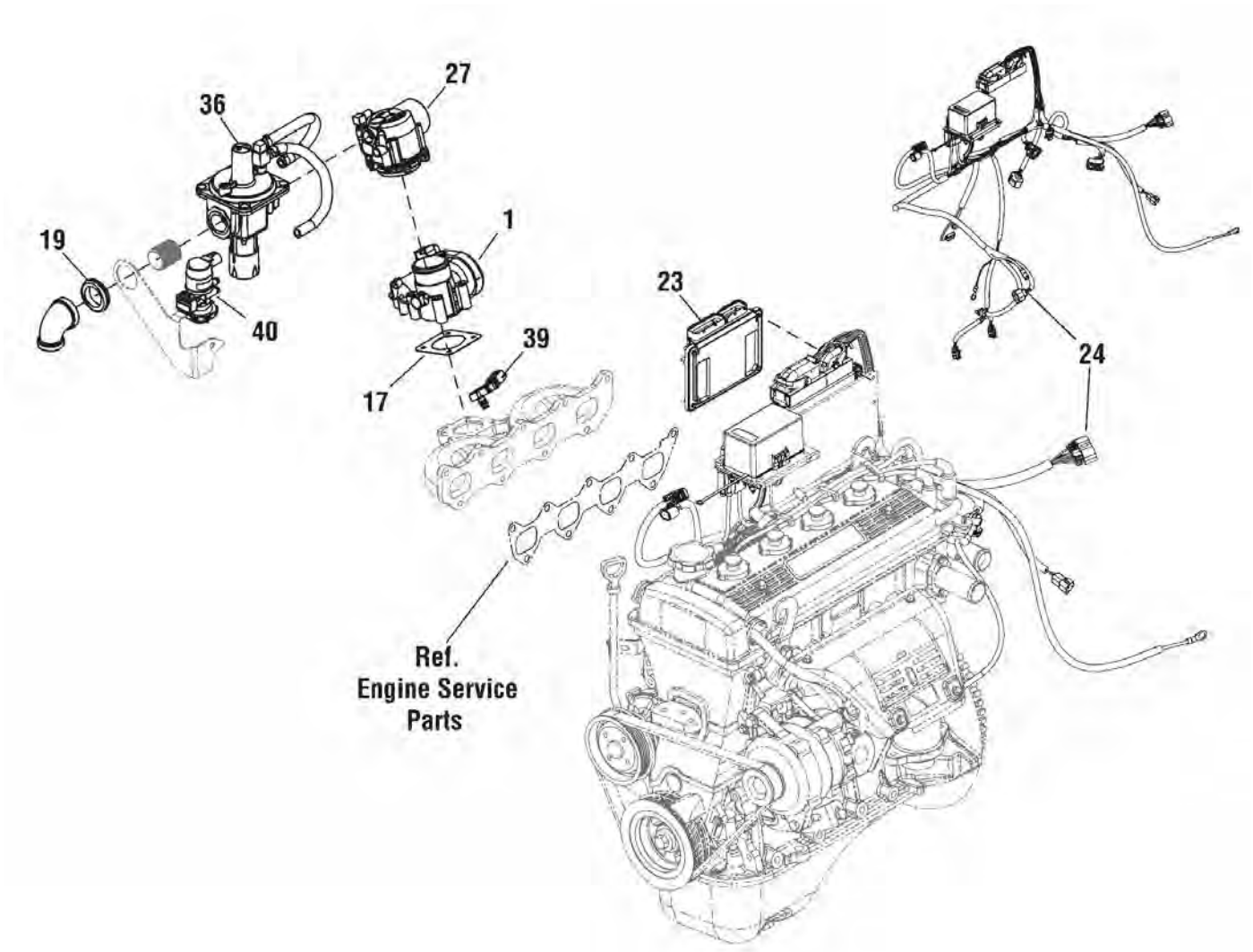

The above parts group applies to the following Mfg. Nos.:

076080-00 - 30,000 Watt LC Standby Generator (GE)

Briggs & Stratton Products Group, LLC
Copyright © 2013 by Briggs & Stratton Corporation
Milwaukee, WI, USA. All rights reserved

Parts List - Engine Group - Fuel Components

Ref.	Part No.	Description	Ref.	Part No.	Description
1	318470GS	BODY-THROTTLE			
17	318473GS	GASKET			
19	318876GS	GROMMET			
23	317758GS	ECM			
24	318368GS	HARNESS-WIRE			
27	318474GS	MIXER-FUEL			
36	318478GS	REGULATOR-FUEL			
39	704221	SENSOR			
40	318479GS	VALVE-FUEL			

Not for Reproduction

Footnotes:

The above parts group applies to the following Mfg. Nos.:

076080-00 - 30,000 Watt LC Standby Generator (GE)

Briggs & Stratton Products Group, LLC
Copyright © 2013 by Briggs & Stratton Corporation
Milwaukee, WI, USA. All rights reserved

Exploded View - Manuals and Accessories

NOTE: Unless noted otherwise, use the standard hardware torque specification chart.

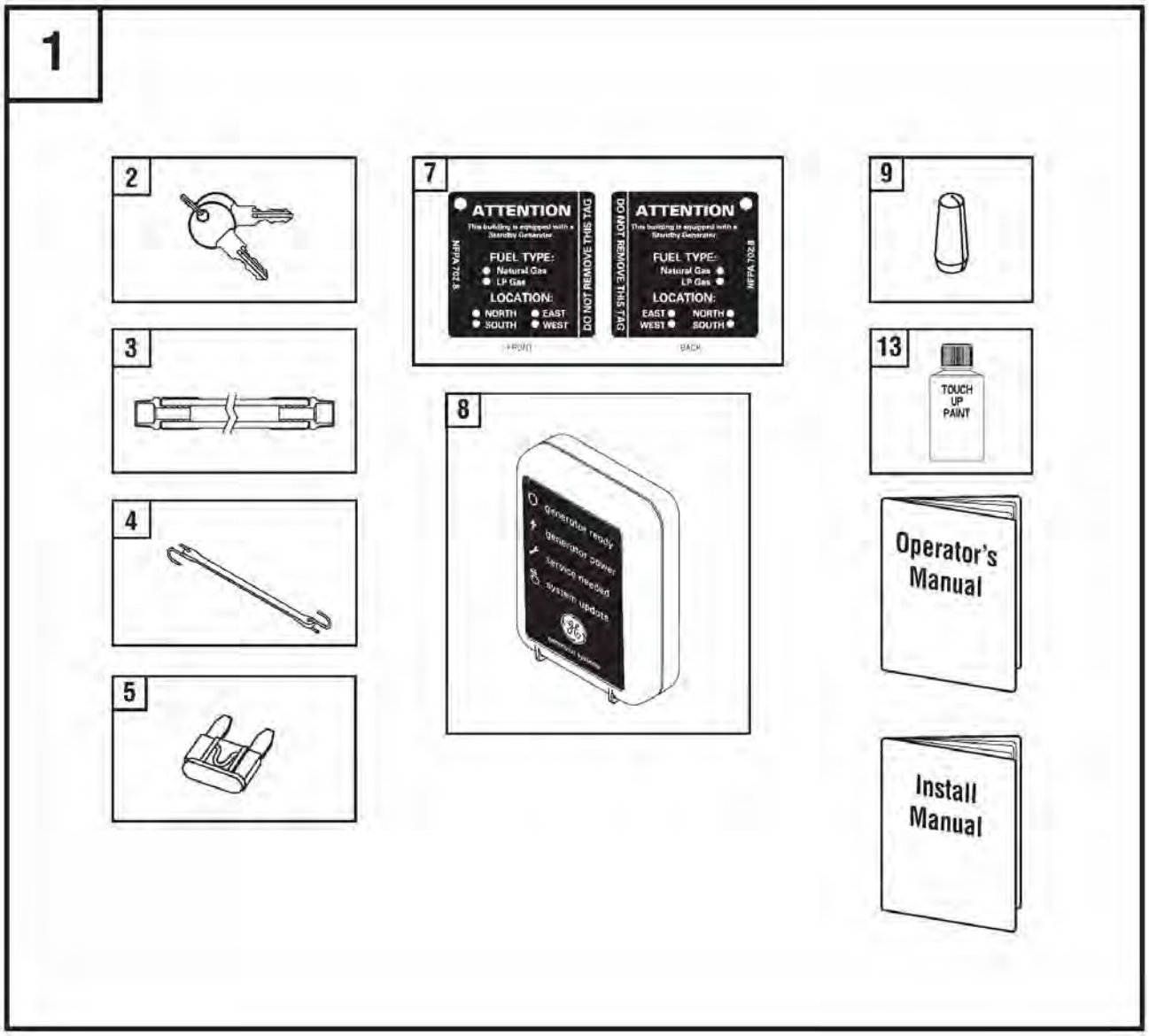

The above parts group applies to the following Mfg. Nos.:

076080-00 - 30,000 Watt LC Standby Generator (GE)

Briggs & Stratton Products Group, LLC
Copyright © 2013 by Briggs & Stratton Corporation
Milwaukee, WI, USA. All rights reserved

Parts List - Manuals and Accessories

Ref.	Part No.	Description	Ref.	Part No.	Description
1	704263	KIT-MANUAL ACC (Includes Ref. Nos. 2, 3, 4, 5, 7, 8, 9 & 13)			
2	314290GS	KEY			
3	205206GS	HOSE			
4	316869GS	STRAP-BATTERY			
5	198573GS	FUSE			
7	195200GS	HANG TAG-ATTN. STANDBY EQUIPMENT			
8	316196GS	BSC MONITOR			
9	316198GS	ANTENNA			
13	319616GS	PAINT- TOUCH-UP, GE BRONZE TEXTURE			
		OPTIONAL ACCESSORIES - NOT INCLUDED			
--	319674GS	PAINT-SPRAY, GE BRONZE TEXTURE (Optional Accessory - Not Included)			
--	6268	KIT-MAINTENANCE (Optional Accessory - Not Included)			
--	6269	BLOCK HEATER (Optional Accessory - Not Included)			
--	6270	KIT-COLD WEATHER (Includes Battery Warmer & Block Heater) (Optional Accessory - Not Included)			
--	6182	BATTERY WARMER (Optional Accessory - Not Included)			

Not for Reproduction

Footnotes:

The above parts group applies to the following Mfg. Nos.:

076080-00 - 30,000 Watt LC Standby Generator (GE)

Briggs & Stratton Products Group, LLC
Copyright © 2013 by Briggs & Stratton Corporation
Milwaukee, WI, USA. All rights reserved

Not for
Reproduction

Hardware Identification & Torque Specifications

Torque Specification Chart

FOR STANDARD METRIC MACHINE HARDWARE (Tolerance ± 20%)

Property Class	5.6 Class 5.6		8.8 Class 8.8		10.9 Class 10.9		12.9 Class 12.9	
Size Of Hardware	in/lbs **ft/lbs**	Nm.	in/lbs **ft/lbs**	Nm.	in/lbs **ft/lbs**	Nm.	in/lbs **ft/lbs**	Nm.
M3	5.88	.56	13.44	1.28	19.2	1.80	22.92	2.15
M4	13.44	1.28	30.72	2.90	43.44	4.10	52.56	4.95
M5	26.4	2.50	60.96	5.75	**5.97**	8.10	**7.15**	9.7
M6	44.64	4.3	**7.3**	9.9	**10.3**	14	**12.1**	16.5
M7	**5.2**	7.1	**12.1**	16.5	**16.9**	23	**19.9**	27
M8	**7.7**	10.5	**17.7**	24	**25**	34	**29**	40
M10	**15**	21	**35**	48	**50**	67	**59**	81
M12	**26**	36	**61**	83	**86.2**	117	**103**	140
M14	**42**	58	**101**	132	**136**	185	**162**	220
M16	**64**	88	**147**	200	**210**	285	**250**	340
M18	**89**	121	**202**	275	**287**	390	**346**	470
M20	**126**	171	**290**	390	**405**	550	**486**	660
M22	**169**	230	**390**	530	**559**	745	**656**	890
M24	**217**	295	**497**	375	**708**	960	**840**	1140
M27	**320**	435	**733**	995	**1032**	1400	**1239**	1680
M30	**435**	590	**995**	1350	**1401**	1900	**1681**	2280
M33	**590**	800	**1349**	1830	**1902**	2580	**2278**	3090
M36	**759**	1030	**1740**	2360	**2441**	3310	**2935**	3980
M39	**988**	1340	**2249**	3050	**3163**	4290	**3798**	5150

The guides and ruler furnished below are designed to help you select the appropriate hardware.

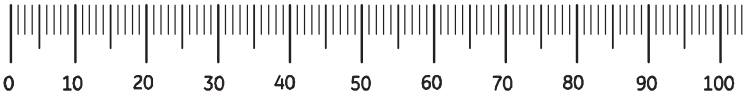

Nut, M8

Thread Diameter (mm)

Inside Diameter (in) — Threads per inch

Nut, 1/2-16

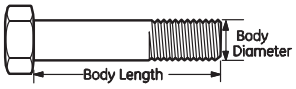

Screw, M8- 1.25 x 25

Thread Diameter (mm) — Distance between threads (mm) — Body Length (mm)

Body Diameter — Threads per inch — Body Length (in)

Screw, 1/2- 16 x 2

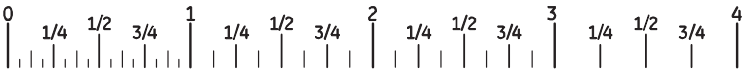

Standard Hardware Sizing

When a washer or nut is identified as **1/2"** (M8), this is the *Nominal size*, meaning the *inside diameter* is 1/2 inch (8mm metric thread diameter); if a second number is present it represents the *threads per inch* (distance between threads),

When bolt or capscrew is identified as **1/2-16 x 2"** (M8 - 1.25 x 50), this means the *Nominal size,* or body diameter is 1/2 inch (8mm metric thread diameter), the second number, 16, represents the *threads per inch,* (distance between threads). The final number is the body length of the bolt or screw, 2 inches (50mm).

Torque Specification Chart

FOR STANDARD MACHINE HARDWARE (Tolerance ± 20%)

Hardware Grade	No Marks SAE Grade 2		SAE Grade 5		SAE Grade 8	
Size Of Hardware	in/lbs **ft/lbs**	Nm.	in/lbs **ft/lbs**	Nm.	in/lbs **ft/lbs**	Nm.
8-32	19	2.1	30	3.4	41	4.6
8-36	20	2.3	31	3.5	43	4.9
10-24	27	3.1	43	4.9	60	6.8
10-32	31	3.5	49	5.5	68	7.7
1/4-20	66	7.6	**8**	10.9	**12**	16.3
1/4-28	76	8.6	**10**	13.6	**14**	19.0
5/16-18	**11**	15.0	**17**	23.1	**25**	34.0
5/16-24	**12**	16.3	**19**	25.8	**29**	34.0
3/8-16	**20**	27.2	**30**	40.8	**45**	61.2
3/8-24	**23**	31.3	**35**	47.6	**50**	68.0
7/16-14	**30**	40.8	**50**	68.0	**70**	95.2
7/16-20	**35**	47.6	**55**	74.8	**80**	108.8
1/2-13	**50**	68.0	**75**	102.0	**110**	149.6
1/2-20	**55**	74.8	**90**	122.4	**120**	163.2
9/16-12	**65**	88.4	**110**	149.6	**150**	204.0
9/16-18	**75**	102.0	**120**	163.2	**170**	231.2
5/8-11	**90**	122.4	**150**	204.0	**220**	299.2
5/8-18	**100**	136	**180**	244.8	**240**	326.4
3/4-10	**160**	217.6	**260**	353.6	**386**	525.0
3/4-16	**180**	244.8	**300**	408.0	**420**	571.2
7/8-9	**140**	190.4	**400**	544.0	**600**	816.0
7/8-14	**155**	210.8	**440**	598.4	**660**	897.6
1-8	**220**	299.2	**580**	788.8	**900**	1,244.0
1-12	**240**	326.4	**640**	870.4	**1,000**	1,360.0

NOTES

1. These torque values are to be used for all hardware excluding: locknuts, self-tapping screws, thread forming screws, sheet metal screws and socket head setscrews.
2. Recommended seating torque values for locknuts:
   a. for prevailing torque locknuts - use 65% of grade 5 torques.
   b. for flange whizlock nuts and screws - use 135% of grade 5 torques.
3. Unless otherwise noted on assembly drawings, all torque values must meet this specification.

Common Hardware Types

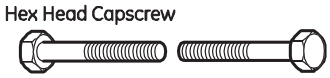

Hex Head Capscrew

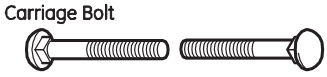

Carriage Bolt

Washer

Lockwasher

Hex Nut

Wrench & Fastener Size Guide

1/4" Bolt or Nut Wrench—7/16"	**5/16" Bolt or Nut** Wrench—1/2"	**3/8" Bolt or Nut** Wrench—9/16"	**7/16" Bolt or Nut** Wrench (Bolt)—5/8 " Wrench (Nut)— 11/16"	**1/2" Bolt or Nut** Wrench—3/4"
M6 Bolt or Nut Wrench—10mm	**M8 Bolt or Nut** Wrench—13mm	**M10 Bolt or Nut** Wrench—17mm	**M12 Bolt or Nut** Wrench—19mm	**M14 Bolt or Nut** Wrench—22 mm

Not for Reproduction

is a trademark of General Electric company and is under licensed by Briggs & Stratton Products Group, LLC.

Copyright © 2013. All Rights reserved. No part of this material may be reproduced or transmitted in any form without the express written permission of Briggs & Stratton Products Group, LLC.