SNAPPER		VICTA
2690846	2691006	2691153 (CE)
2690847	2691007	2691154 (CE)
2690848	2691008	
2690888	2691021	
2690889	2691022	
2690890	2691023	
2690919 (CE)	2691024	
2690920 (CE)	2691025	
2690921 (CE)	2691026	
2690924 (CE)	2691027	
2690925	2691028	
2690926		
2690942		
2690943		
2690944		
2690984 (CE)		

NOTE: SPX tractors with push button start will not have electric height of cut, digital dash display or electric fuel gauge.

Not for Reproduction

Powering Up / On

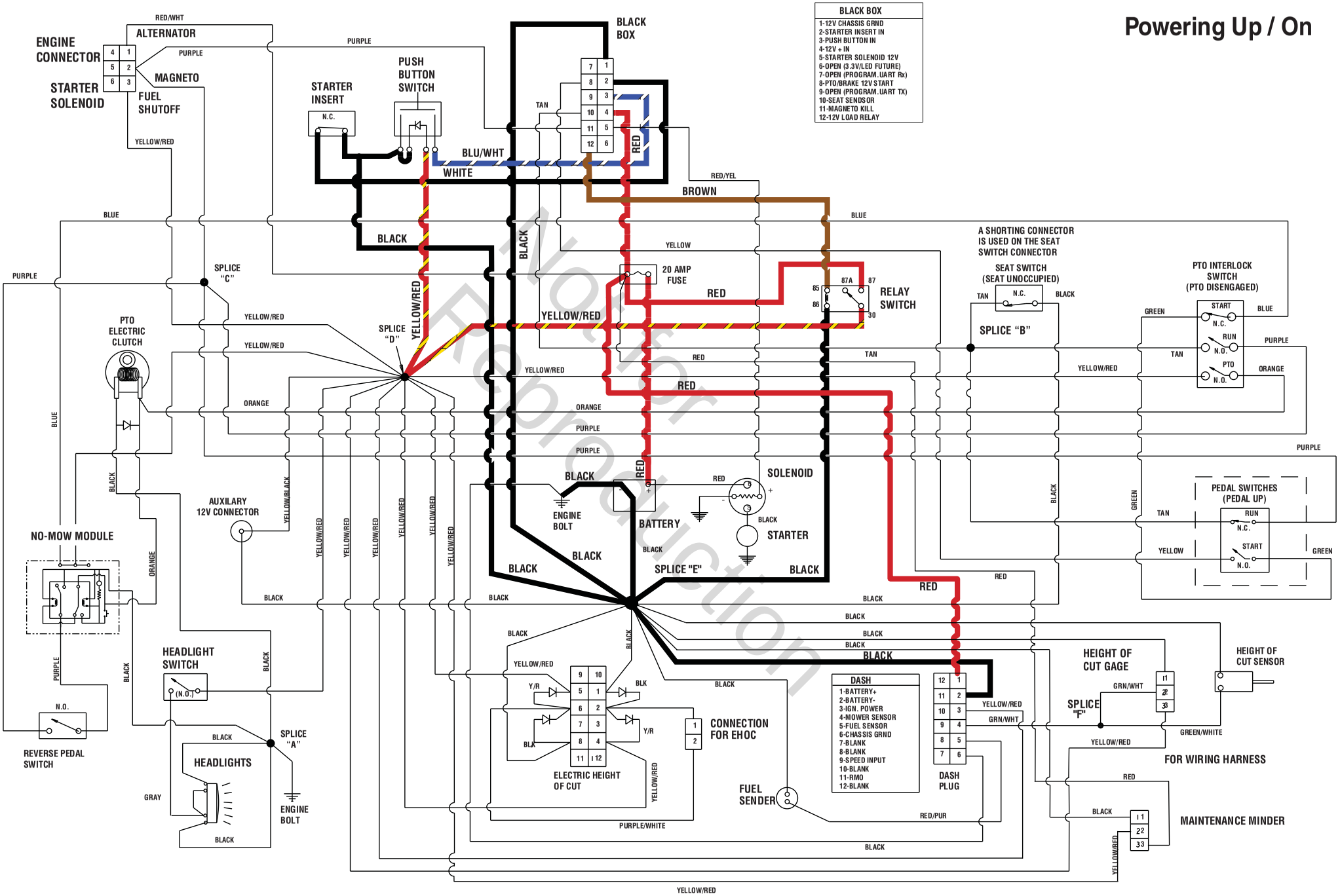

Not for Reproduction

Charging Circuit

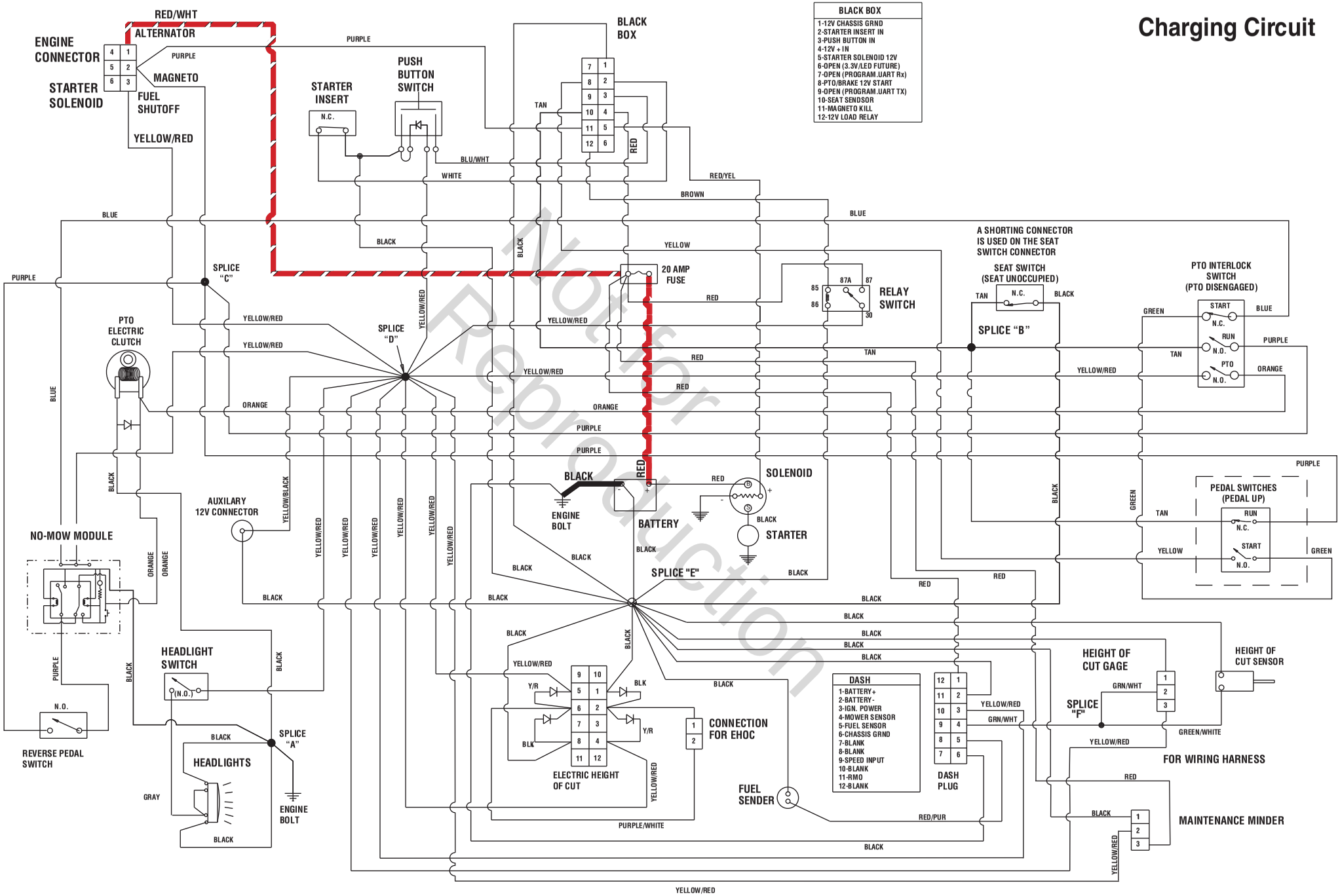

BLACK BOX
1-12V CHASSIS GRND
2-STARTER INSERT IN
3-PUSH BUTTON IN
4-12V + IN
5-STARTER SOLENOID 12V
6-OPEN (3.3V/LED FUTURE)
7-OPEN (PROGRAM.UART Rx)
8-PTO/BRAKE 12V START
9-OPEN (PROGRAM.UART TX)
10-SEAT SENDSOR
11-MAGNETO KILL
12-12V LOAD RELAY

Not for Reproduction

Cranking Circuit

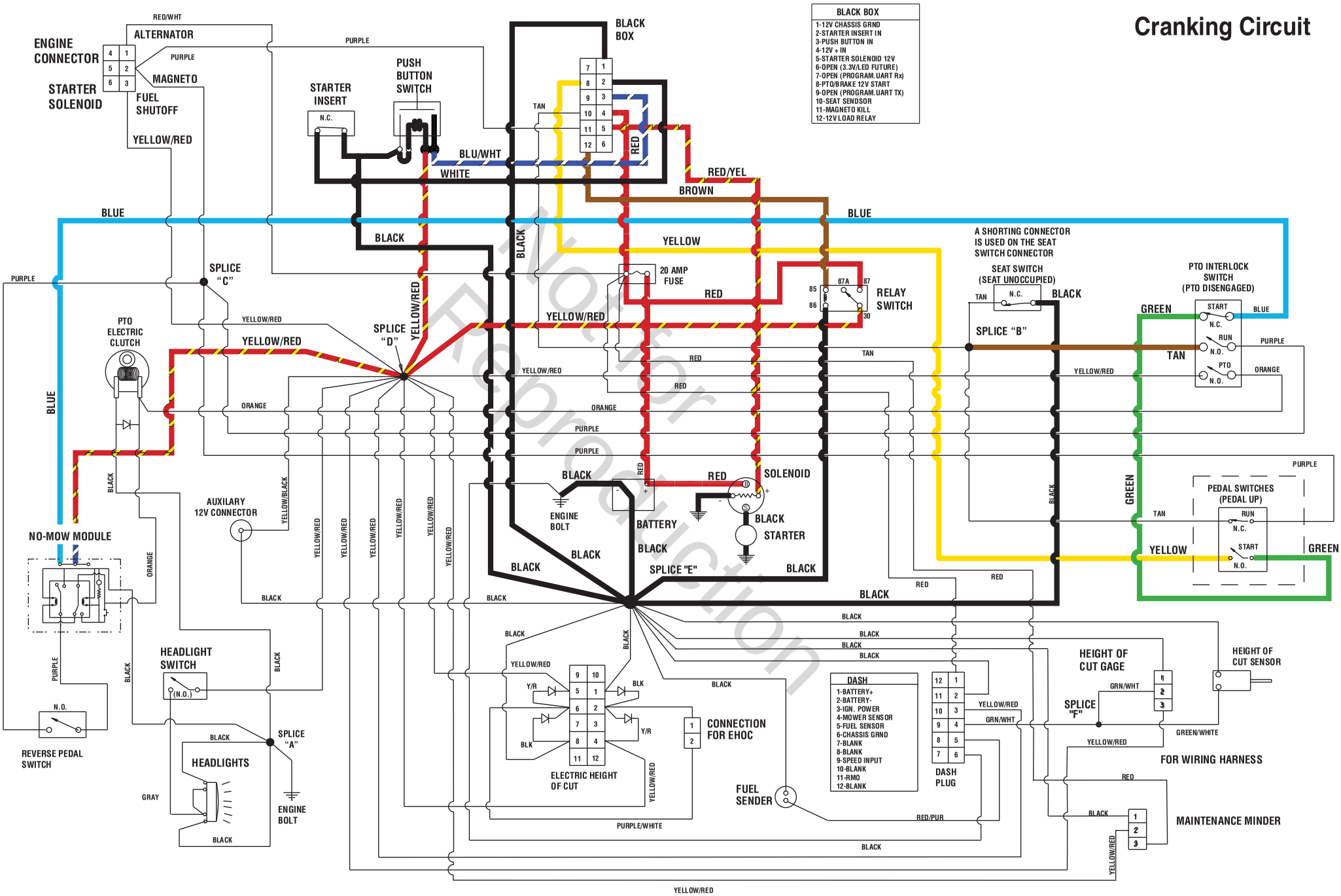

Not for Reproduction

Ignition / Shutdown Circuit

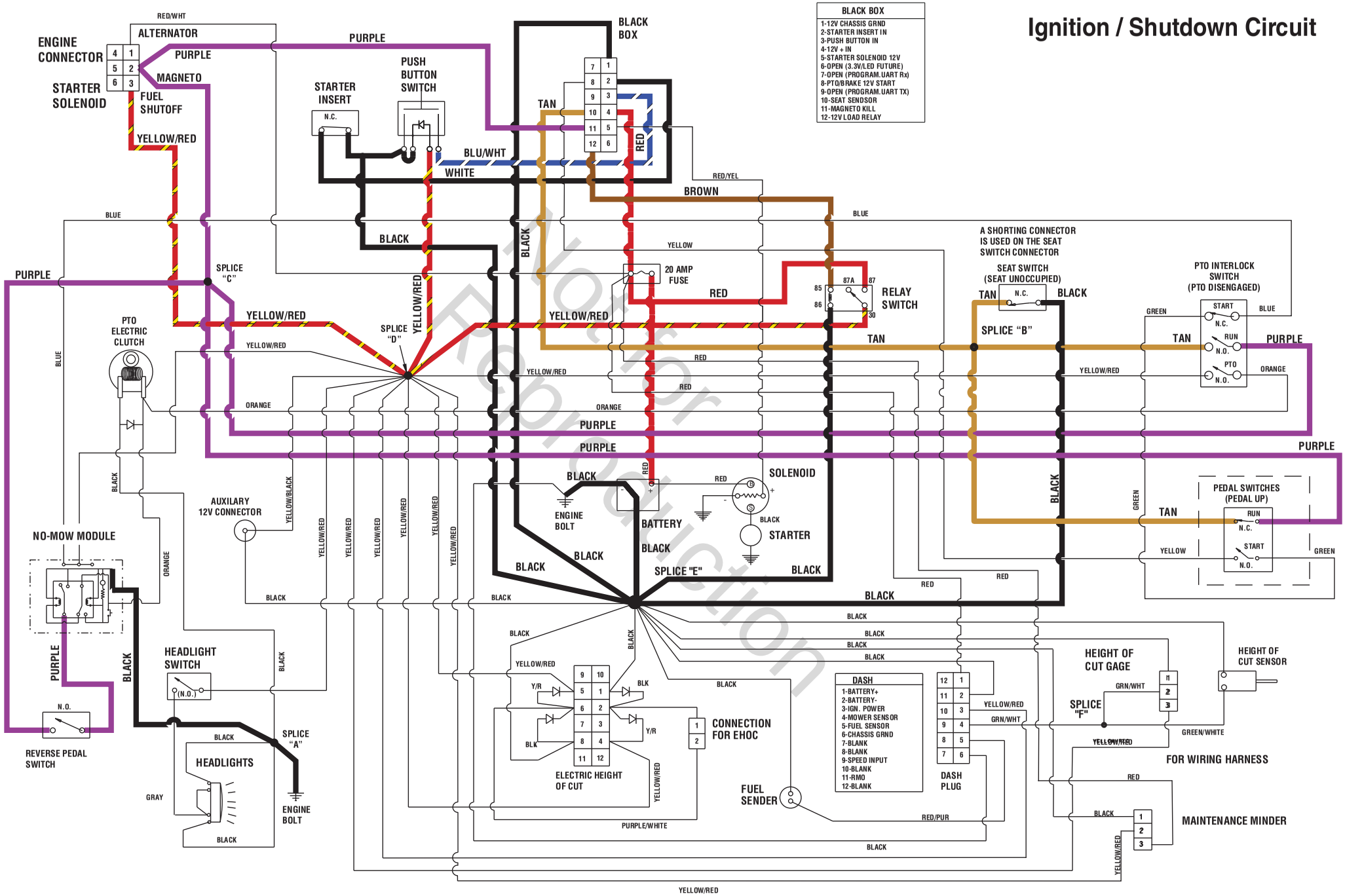

Not for Reproduction
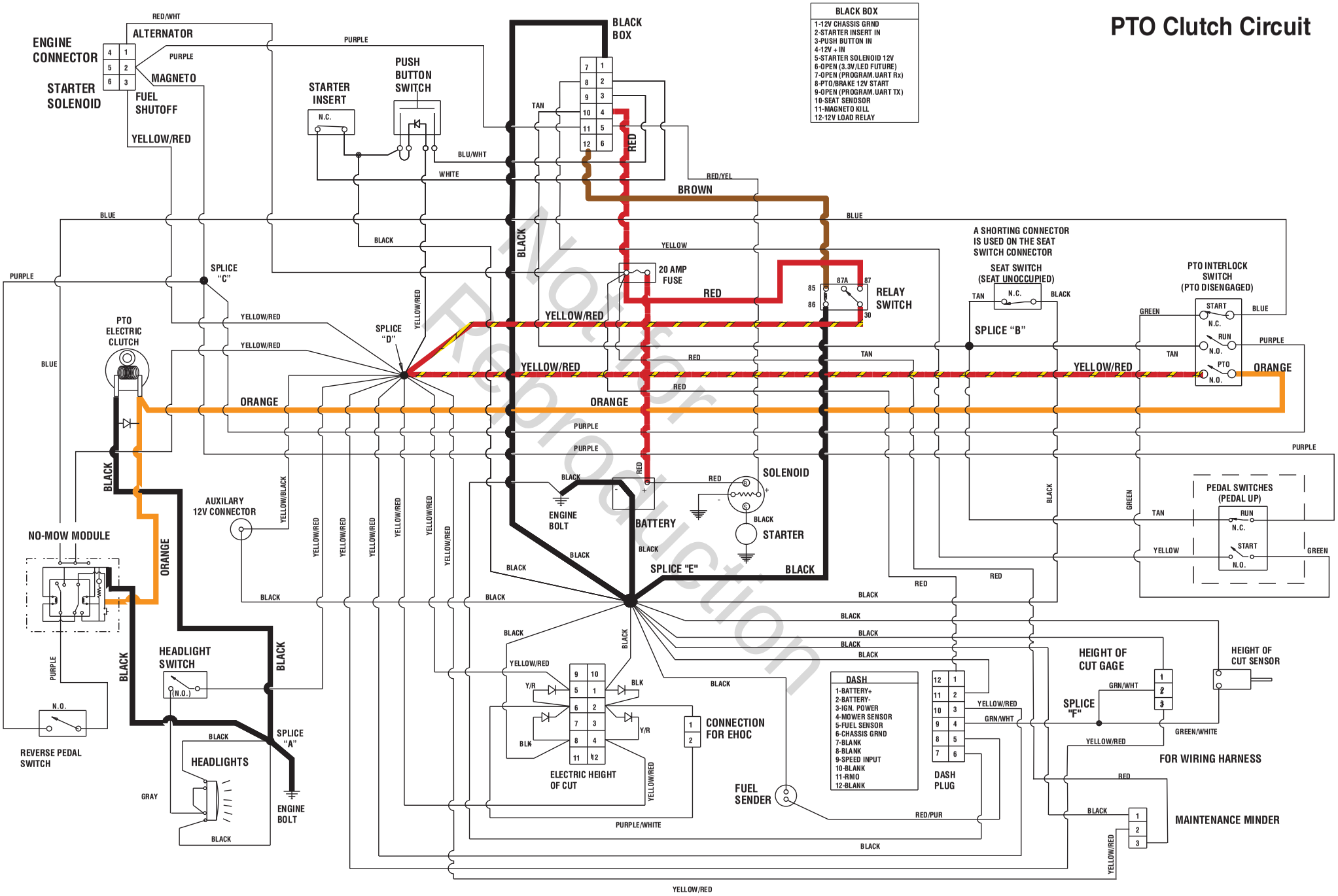
PTO Clutch Circuit