Illustrated Parts List

MODEL
071049-00
071049-01
071068-00
071068-01

Not for Reproduction

Questions?
Help is just a moment away!
Call: Transfer Switch Helpline

Preguntas?
La ayuda es justa un momento lejos!
Llamada: Línea Directa de generador de

800-743-4115 M - F 8:00 AM - 5:00 PM CT

200 Amp
Automatic Transfer Switch
with Service Disconnect and Symphony™ II Power Management System

Manual Part No. 313176
Revision C
Rev. Date: 3/27/2014

Not for
Reproduction

PRODUCT COMPONENTS **PAGES**

Transfer Switch - Hinged Enclosure 8
Transfer Switch - Hingeless Enclosure 10
Torque Specification Chart ..... Inside Back Cover

Not for Reproduction

Exploded View - Transfer Switch - Hinged Enclosure

NOTE: Unless noted otherwise, use the standard hardware torque specification chart.

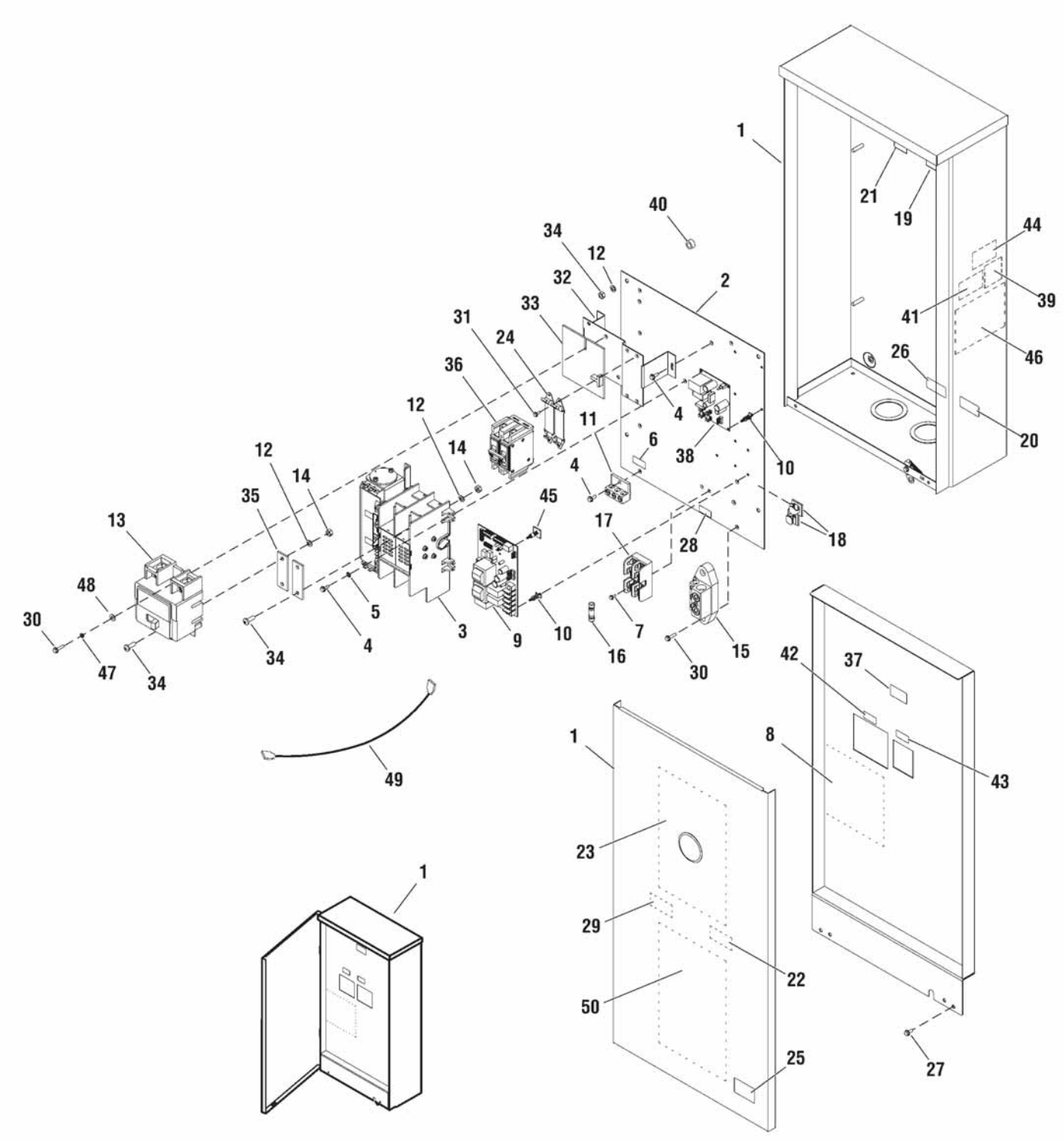

The above parts group applies to the following Mfg. Nos.:

071049-00 - 200 Amp Automatic Transfer Switch

071068-00 - 200 Amp Automatic Transfer Switch (Packaged)

Briggs & Stratton Porducts Group, LLC
Copyright © 2014 by Briggs & Stratton Corporation
Milwaukee, WI, USA. All rights reserved

Parts List - Transfer Switch - Hinged Enclosure

Ref.	Part No.	Description
1	-----	ENCLOSURE
2	-----	BACK PANEL
3	314869GS	SWITCH, Transfer
4	-----	* TRILOBULAR, #10-32 x 1/2
5	-----	* WASHER, External Tooth, #10
6	B4986AGS	DECAL
7	-----	* SCREW, Hex Head, Trilobular, #6-32 x 3/8
8	193664GS	INSULATION
9	208059GS	BOARD, Circuit
10	197979GS	SPACER
11	196094GS	LUG
12	-----	* WASHER, Lock, 1/4
13	192065GS	BREAKER, Circuit, 200A
14	-----	* NUT, 1/4-20
15	192696GS	TERMINAL
16	B4857GS	FUSE
17	192151GS	HOLDER, Fuse
18	197355GS	CLIP
19	B5107GS	DECAL
20	209048GS	DECAL
21	B5106GS	DECAL
22	192558GS	DECAL
23	311306GS	DECAL
24	192770GS	BRACKET
25	205395GS	DECAL
26	190984GS	DECAL
27	B5763GS	TRILOBULAR, #10-32 x 3/8”
28	192597GS	DECAL
29	193450GS	DECAL
30	-----	* SCREW, Hex Head, Trilobular, #10-32 x 3/4
31	-----	* SCREW, Hex Head, Trilobular, 8-32x 3/8
32	201157GS	BRACKET
33	192879GS	INSULATOR
34	-----	* SCREW, Phillips Head, 1/4-20x 3/4
35	192881GS	BAR, Bus
36	192882GS	BREAKER, Circuit, 100A
37	193159GS	DECAL
38	310443GS	BOARD, Circuit
39	205402GS	DECAL
40	192150GS	SPACER
41	197198GS	DECAL
42	202758GS	DECAL
43	202361GS	DECAL
44	202760GS	DECAL
45	202841GS	STANDOFF
46	205478GS	DECAL
47	-----	* WASHER, Lock, #10
48	-----	* WASHER, Flat, #10
49	192242TGS	WIRE
50	205061GS	DECAL (Not Illustrated)
--	193306GS	SCREW, Bonding (Not Illustrated)
--	193551GS	DECAL, Service Disconnect (Not Illustrated)
--	315229GS	MANUAL, Operator (Not Illustrated)
--	315230GS	MANUAL, Install (Not Illustrated)
--	312843GS	KIT, Manual (Not Illustrated)
--	208106GS	CURRENT TRANSFORMER (Not Illustrated)
--	317609GS	DECAL, Power Delay Notice (Optional Accessory

Not for Reproduction

Footnotes

* Items without part numbers are common fasteners, available at local hardware stores.

The above parts group applies to the following Mfg. Nos.:

071049-00 - 200 Amp Automatic Transfer Switch

071068-00 - 200 Amp Automatic Transfer Switch (Packaged)

Briggs & Stratton Porducts Group, LLC
Copyright © 2014 by Briggs & Stratton Corporation
Milwaukee, WI, USA. All rights reserved

Exploded View - Transfer Switch - Hingeless Enclosure

NOTE: Unless noted otherwise, use the standard hardware torque specification chart.

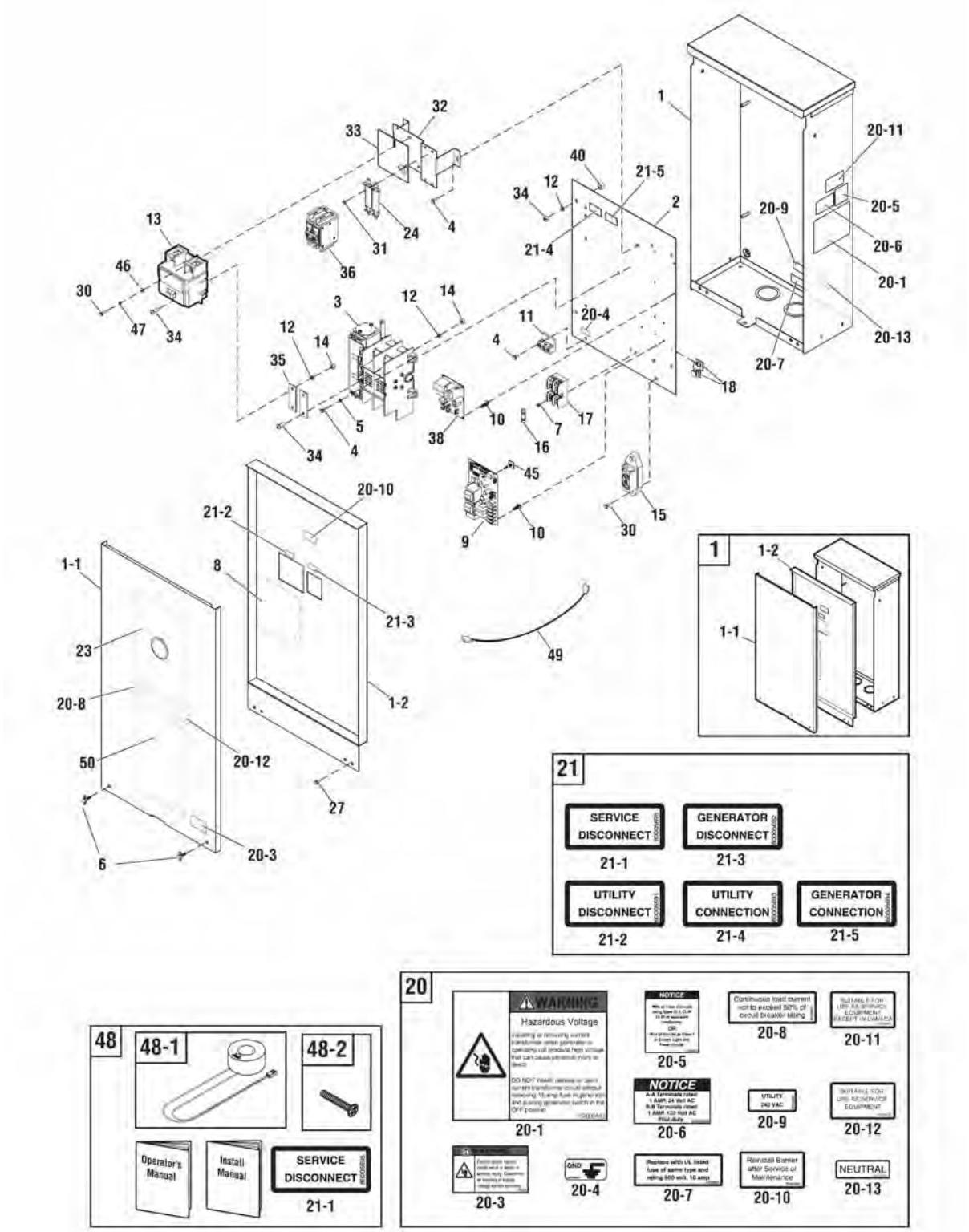

The above parts group applies to the following Mfg. Nos.:

071049-01 - 200 Amp Automatic Transfer Switch

071068-01 - 200 Amp Automatic Transfer Switch (Packaged)

Briggs & Stratton Porducts Group, LLC
Copyright © 2014 by Briggs & Stratton Corporation
Milwaukee, WI, USA. All rights reserved

Parts List - Transfer Switch - Hingeless Enclosure

Ref.	Part No.	Description
1	-----	ENCLOSURE
1-1	705952	DOOR
1-2	705961	DEADFRONT
2	-----	BACK PANEL
3	314869GS	SWITCH, Transfer
4	-----	* TRILOBULAR, #10-32 x 1/2
5	-----	* WASHER, External Tooth, #10
6	315108GS	SCREW
7	-----	* SCREW, Hex Head, Trilobular, #6-32 x 3/8
8	193664GS	INSULATION
9	208059GS	BOARD, Circuit
10	197979GS	SPACER
11	196094GS	LUG
12	-----	* WASHER, Lock, 1/4
13	192065GS	BREAKER, Circuit, 200A
14	-----	* NUT, 1/4-20
15	192696GS	TERMINAL
16	B4857GS	FUSE
17	192151GS	HOLDER, Fuse
18	197355GS	CLIP
20	704420	DECAL SHEET - WARNINGS (Includes Ref. Nos. 20-1, 20-3, 20-4, 20-5, 20-6, 20-7, 20-8, 20-9, 20-10, 20-11 & 20-12)
20-1	-----	DECAL, Warning Voltage
20-3	-----	DECAL, Warning Shock
20-4	-----	DECAL, Ground
20-5	-----	DECAL, Notice
20-6	-----	DECAL, Contacts Rated
20-7	-----	DECAL, Fuse, 10 Amp
20-8	-----	DECAL, Breaker, Circuit
20-9	-----	DECAL, Sensing, Utility
20-10	-----	DECAL, Reinstall After
20-11	-----	DECAL, Not Suitable
20-12	-----	DECAL, Suit. as Service Equip.
20-13	-----	DECAL, Neutral
21	705423	DECAL SHEET-CONNECTIONS (Includes Ref. Nos. 21-1, 21-2, 21-3, 21-4 & 21-5)
21-1	-----	DECAL, Service Disconnect
21-2	-----	DECAL, Disconnect Utility
21-3	-----	DECAL, Gen Disconnect
21-4	-----	DECAL, Connection, Utility
21-5	-----	DECAL, Connect Gen
23	311306GS	DECAL
24	192770GS	BRACKET
27	B5763GS	TRILOBULAR, #10-32 x 3/8”
30	-----	* SCREW, Hex Head, Trilobular, #10-32 x 3/4
31	-----	* SCREW, Hex Head, Trilobular, 8-32 x 3/8
32	201157GS	BRACKET
33	192879GS	INSULATOR
34	-----	* SCREW, Phillips Head, 1/4-20x 3/4
35	192881GS	BAR, Bus
36	202593GS	BREAKER, Circuit, 100A
38	310443GS	BOARD, Circuit
40	192150GS	SPACER
45	202841GS	STANDOFF
46	-----	* WASHER, Flat, #10
47	-----	* WASHER, Lock, #10
48	312843GS	KIT, Manual (Includes Ref. Nos. 48-1, 48-2 & Manual.)
48-1	208106GS	CURRENT TRANSFORMER
48-2	193306GS	SCREW, Bonding
49	192242TGS	WIRE
50	205061GS	DECAL
--	317609GS	DECAL, Power Delay Notice (Optional Accessory - Not Included)

Not for Reproduction

Footnotes

* Items without part numbers are common fasteners, available at local hardware stores.

The above parts group applies to the following Mfg. Nos.:

071049-01 - 200 Amp Automatic Transfer Switch

071068-01 - 200 Amp Automatic Transfer Switch (Packaged)

Briggs & Stratton Porducts Group, LLC
Copyright © 2014 by Briggs & Stratton Corporation
Milwaukee, WI, USA. All rights reserved

Not for
Reproduction

Not for
Reproduction

Not for
Reproduction

Hardware Identification & Torque Specifications

Torque Specification Chart

FOR STANDARD METRIC MACHINE HARDWARE (Tolerance ± 20%)

Property Class	5.6 Class 5.6		8.8 Class 8.8		10.9 Class 10.9		12.9 Class 12.9	
Size Of Hardware	*in/lbs* **ft/lbs**	Nm.	*in/lbs* **ft/lbs**	Nm.	*in/lbs* **ft/lbs**	Nm.	*in/lbs* **ft/lbs**	Nm.
M3	*5.88*	*.56*	*13.44*	*1.28*	*19.2*	*1.80*	*22.92*	2.15
M4	*13.44*	*1.28*	*30.72*	*2.90*	*43.44*	*4.10*	*52.56*	4.95
M5	*26.4*	*2.50*	*60.96*	*5.75*	**5.97**	*8.10*	**7.15**	9.7
M6	*44.64*	*4.3*	**7.3**	*9.9*	**10.3**	*14*	**12.1**	16.5
M7	**5.2**	*7.1*	**12.1**	*16.5*	**16.9**	*23*	**19.9**	27
M8	**7.7**	*10.5*	**17.7**	*24*	**25**	*34*	**29**	40
M10	**15**	*21*	**35**	*48*	**50**	*67*	**59**	81
M12	**26**	*36*	**61**	*83*	**86.2**	*117*	**103**	140
M14	**42**	*58*	**101**	*132*	**136**	*185*	**162**	220
M16	**64**	*88*	**147**	*200*	**210**	*285*	**250**	340
M18	**89**	*121*	**202**	*275*	**287**	*390*	**346**	470
M20	**126**	*171*	**290**	*390*	**405**	*550*	**486**	660
M22	**169**	*230*	**390**	*530*	**559**	*745*	**656**	890
M24	**217**	*295*	**497**	*375*	**708**	*960*	**840**	1140
M27	**320**	*435*	**733**	*995*	**1032**	*1400*	**1239**	1680
M30	**435**	*590*	**995**	*1350*	**1401**	*1900*	**1681**	2280
M33	**590**	*800*	**1349**	*1830*	**1902**	*2580*	**2278**	3090
M36	**759**	*1030*	**1740**	*2360*	**2441**	*3310*	**2935**	3980
M39	**988**	*1340*	**2249**	*3050*	**3163**	*4290*	**3798**	5150

The guides and ruler furnished below are designed to help you select the appropriate hardware.

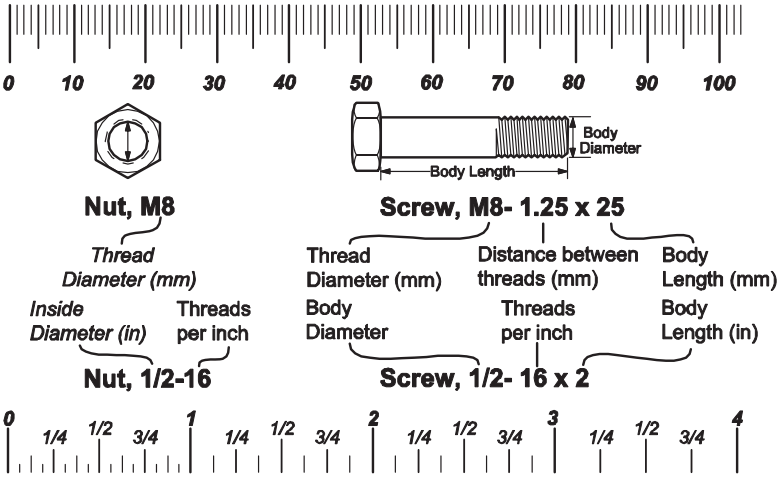

Standard Hardware Sizing

When a washer or nut is identified as **1/2"** (M8), this is the *Nominal size*, meaning the *inside diameter* is 1/2 inch (8mm metric thread diameter); if a second number is present it represents the *threads per inch* (distance between threads).

When bolt or capscrew is identified as **1/2 - 16 x 2"** (M8 - 1.25 x 50), this means the *Nominal size*, or body diameter is 1/2 inch (8mm metric thread diameter), the second number,16, represents the *threads per inch, (distance between threads).* The final number is the body length of the bolt or screw, 2 inches (50mm).

Torque Specification Chart

FOR STANDARD MACHINE HARDWARE (Tolerance ± 20%)

Hardware Grade	No Marks SAE Grade 2		SAE Grade 5		SAE Grade 8	
Size Of Hardware	*in/lbs* **ft/lbs**	Nm.	*in/lbs* **ft/lbs**	Nm.	*in/lbs* **ft/lbs**	Nm.
8-32	*19*	2.1	*30*	3.4	*41*	4.6
8-36	*20*	2.3	*31*	3.5	*43*	4.9
10-24	*27*	3.1	*43*	4.9	*60*	6.8
10-32	*31*	3.5	*49*	5.5	*68*	7.7
1/4-20	*66*	7.6	**8**	10.9	**12**	16.3
1/4-28	*76*	8.6	**10**	13.6	**14**	19.0
5/16-18	**11**	15.0	**17**	23.1	**25**	34.0
5/16-24	**12**	16.3	**19**	25.8	**29**	34.0
3/8-16	**20**	27.2	**30**	40.8	**45**	61.2
3/8-24	**23**	31.3	**35**	47.6	**50**	68.0
7/16-14	**30**	40.8	**50**	68.0	**70**	95.2
7/16-20	**35**	47.6	**55**	74.8	**80**	108.8
1/2-13	**50**	68.0	**75**	102.0	**110**	149.6
1/2-20	**55**	74.8	**90**	122.4	**120**	163.2
9/16-12	**65**	88.4	**110**	149.6	**150**	204.0
9/16-18	**75**	102.0	**120**	163.2	**170**	231.2
5/8-11	**90**	122.4	**150**	204.0	**220**	299.2
5/8-18	**100**	136	**180**	244.8	**240**	326.4
3/4-10	**160**	217.6	**260**	353.6	**386**	525.0
3/4-16	**180**	244.8	**300**	408.0	**420**	571.2
7/8-9	**140**	190.4	**400**	544.0	**600**	816.0
7/8-14	**155**	210.8	**440**	598.4	**660**	897.6
1-8	**220**	299.2	**580**	788.8	**900**	1,244.0
1-12	**240**	326.4	**640**	870.4	**1,000**	1,360.0

NOTES

1. These torque values are to be used for all hardware excluding: locknuts, self-tapping screws, thread forming screws, sheet metal screws and socket head setscrews.
2. Recommended seating torque values for locknuts:
   a. for prevailing torque locknuts - use 65% of grade 5 torques.
   b. for flange whizlock nuts and screws - use 135% of grade 5 torques.
3. Unless otherwise noted on assembly drawings, all torque values must meet this specification.

Common Hardware Types

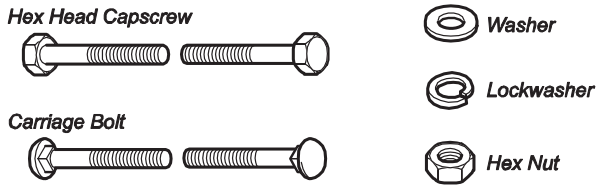

Wrench & Fastener Size Guide

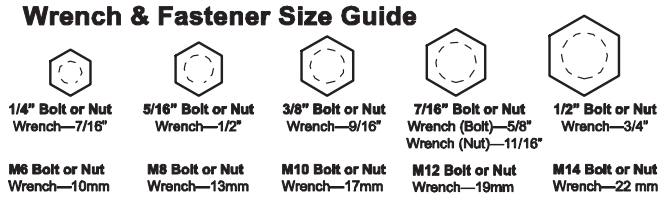

Not for Reproduction

Briggs & Stratton Products Group, LLC

Copyright© 2014 Briggs & Stratton Products Group, LLC. All rights reserved. No part of this page can be reproduced or transmitted in any form by any means without the express written permission of Briggs & Stratton Products Group, LLC.