7600197 Headlight Kit

For Rear Engine Riders

This kit contains a state-of-the-art LED headlight for illuminating the area in front of the Rear Engine Rider.

CAUTION

Mowing at night is not recommended, even with the headlight kit installed.

Kit Contents

1 - 7105923 Headlight Assembly
1 - 7106045 Installation Instructions

Kit Installation

1. Turn the ignition key to the OFF position, remove the key, disconnect the spark plug wire and secure away from the spark plug.
2. Disconnect the black negative (-) cable from the battery, and secure away from the battery. On models with a separate battery harness, disconnect the battery harness from the main unit harness. Refer to the Operator's Manual.
3. Using the blade of a screwdriver or similar prying tool, carefully remove the cover (**A**, Figure 1) from the front of the steering tower (**B**). Store in a safe place for future use.
4. Locate the following two loose wires within the steering tower - the red/yellow wire (**C**) in the upper section of the steering tower, and the green wire (**D**) in the lower section of the steering tower (fastened to the steering shaft bearing). Carefully guide the ends of the wires out through the opening. **Do not pull on the wires.**

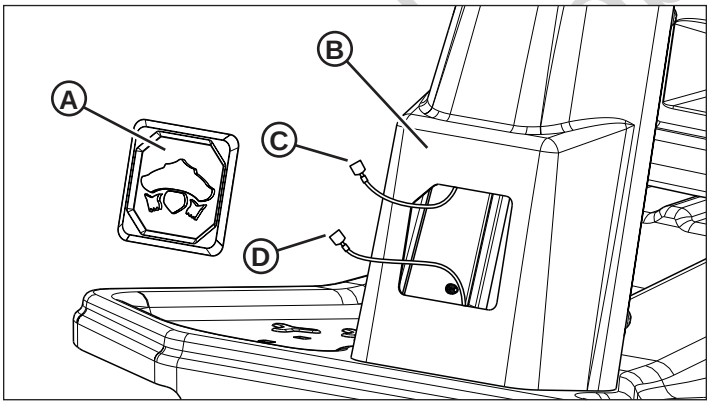

Figure 1

5. Connect the two wires located in Step 4 to the two spades (**E**, Figure 2) at the back of the headlight assembly (**F**). Be sure the wire terminals are fully installed onto the spades.

   NOTE: Either wire can connect to either spade.

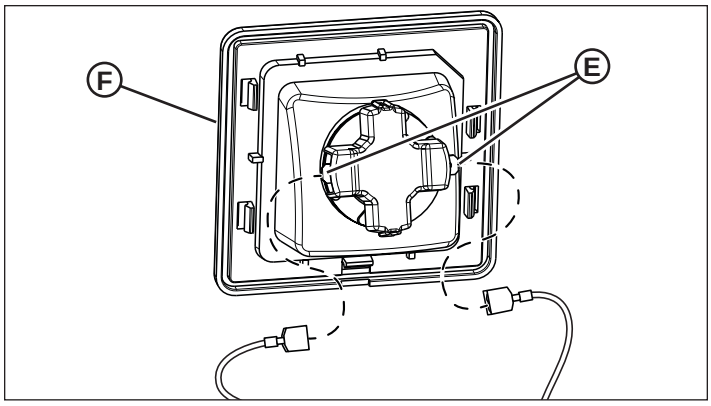

Figure 2

6. Carefully install the headlight assembly into the opening in the steering tower as shown (Figure 3), making sure the clips (**G**, inset) lock the assembly in place.

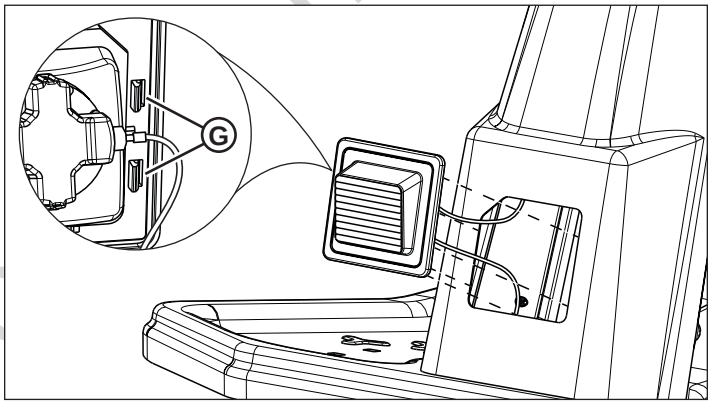

Figure 3

7. Reconnect the battery.
8. Check the headlight for proper operation: The headlight should be ON any time the ignition key is in the RUN or START position, and should be OFF when the key is in the OFF position.

   If the headlight is not operational, or does not operate correctly, check to make sure all installation steps have been properly completed, then contact your authorized dealer for assistance.

Installation is complete.

NOTE: The battery on the unit should be charged after each use. Refer to the Operator's Manual.