IS3100Z WIRE HARNESS - MODELS EQUIPPED WITH KAWASAKI DFI ENGINES
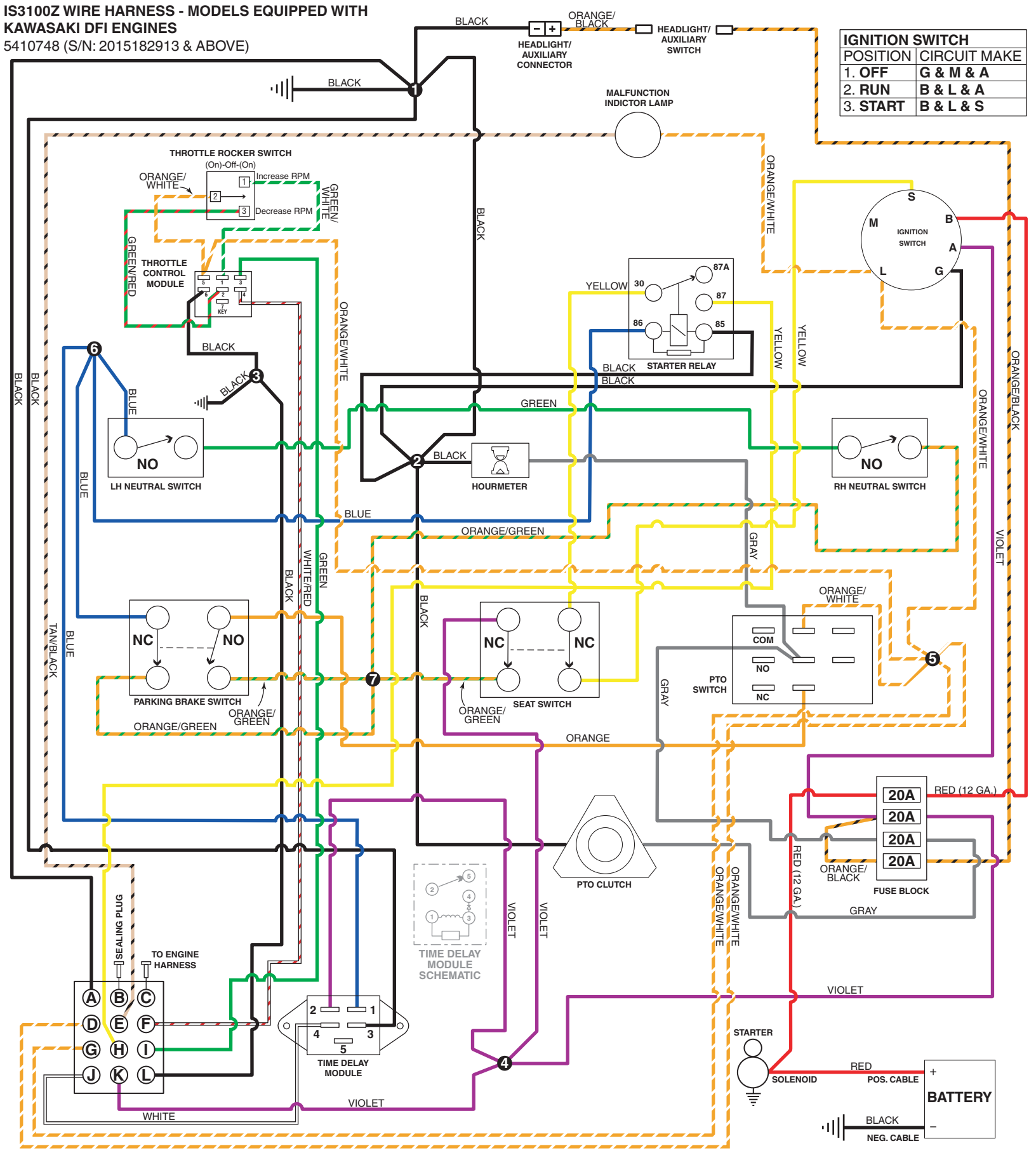
5410748 (S/N: 2015182913 & ABOVE)